FUJITSU

MCE3064SS, MCF3064SS

OPTICAL DISK DRIVES

PRODUCT MANUAL

C156-E097-01EN

REVISION RECORD

Edition	Date published	Revised contents
01	May, 1999	

Specification No.: C156-E097-**EN

The contents of this manual is subject to change without prior notice.

All Rights Reserved.
Copyright © 1999 FUJITSU LIMITED

This page is intentionally left blank.

PREFACE

This manual describes the MCE3064SS/MCF3064SS 3.5-inch optical disk drives. These drives are equipped with a small computer system interface (SCSI) controller

This manual explains the specifications of the above optical disk drive and function of the SCSI (Small Computer System Interface) that interfaces to the user's system.

The manual is intended for users who have a basic understanding of optical disk drives and their use in computer systems.

See "Manual Organization" for details on the organization of manuals related to the optical disk drives and the scope of this manual. Use the other manuals shown in "Manual Organization" as well as this manual if necessary.

This manual is organized as follows:

Chapter 1 GENERAL DESCRIPTION

This chapter introduces the MCE3064SS/MCF3064SS optical disk drives and describes their standard features, system configuration, and drive configuration.

Chapter 2 SPECIFICATIONS

This chapter describes the specifications of the MCE3064SS/MCF3064SS optical disk drives, SCSI function specifications, and optical disk cartridge specifications.

Chapter 3 INSTALLATION REQUIREMENTS

This chapter describes basic installation requirements (environment, mounting, power supply, and connection) for the MCE3064SS/MCF3064SS optical disk drives.

Chapter 4 INSTALLATION

This chapter describes installation of the MCE3064SS/MCF3064SS optical disk drives and includes:

- Notes on handling the drive
- Connection modes
- Settings
- Mounting
- Cable connections
- Operation, confirmation, and preparation for use after installation
- Notes on removing the installed drive

Chapter 5 OPERATION AND CLEANING

This chapter describes the operation and cleaning of the MCE3064SS/MCF3064SS optical disk drives, outlines optical disk cartridges, and describes how to clean the cartridges.

Chapter 6 DIAGNOSIS AND MAINTENANCE

This chapter describes the self-diagnostic functions and maintenance of the MCE3064SS/MCF3064SS optical disk drives.

Note: The MCE3064SS/MCF3064SS optical disk drives are called an ODD, drive, device or target (TARG) in the explanations in this manual.

Chapter 7 SCSI BUS

This chapter describes in detail the configuration, physical/electrical conditions, interface protocol and operation of the SCSI (Small Computer System Interface), which is an interface for connecting the MCE3064SS/MCF3064SS optical disk drives and the user system to each other.

Conventions for Alert Messages

This manual uses the following conventions to show the alert messages. An alert message consists of an alert signal and alert statements. The alert signal consists of an alert symbol and a signal word or just a signal word.

The following are the alert signals and their meanings:

⚠DANGER	This indicates a hazarous situation *likely* to result in *serious personal injury* if the user does not perform the procedure correctly.
⚠WARNING	This indicates a hazarous situation *could* result in *personal injury* if the user does not perform the porocedure correctly.
⚠CAUTION	This indicates a hazarous situation *could* result in *minor* or *moderate personal injury* if the user does not perform the procedure correctly. This alert signal also indicates that damages to the product or other property, *may* occur if the user oes not perform the procedure correctly.
IMPORTANT	This indicates information that could help the user use the product more efficiently.

In the text, the alert signal is centered, followed below by the indented message. A wider line space precedes and follows the alert message to show where the alert message begins and ends. The following is an example:

(Example)

⚠CAUTION

Before moving the drive, remove the optical disk cartridge to avoid head or disk damage

The main alert messages in the text are also listed in the “Important Alert Items.”

DISCLAIMER

Failure of the MCE3064SS/MCF3064SS optical disk drives are defined as a failure requiring adjustment, repair, or replacement. Fujitsu is not responsible for failure due to misuse, operation outside the specified environment conditions, power line trouble, controller problems, cable failure, or other failure not caused by the optical disk drive itself.

Important Alert Items

Important Alert Messages

The important alert messages in this manual are as follows:

⚠CAUTION A hazarous situation *could* result in *minor* or *moderate personal injury* if the user does not perform the procedure correctly. This alert signal also indicates that damages to the produt or other property, *may* occur if the user does not perform the procedure correctly.

Task	Alert message	Page
Operation	*Low temperature burns:* *The surface temperatures of some ICs on the printed circuit board unit in the optical disk drive exceed 55°C while operating. Be careful of low tenperature burns.*	3-1
Installation	*Loss of data* *When the verify function is invalid, the write data quality is not guaranteed. This mode should not be used for storing important data. When using the mode for storing important data, a preventive system measure such as file duplication is required.*	3-26
	1) Shock or vibration applied to the drive that exceeds the values defined in the standard damage the drive. Use care when unpacking. *2) Do not leave the drive in dirty or contaminated environments.* *3) Since static discharge may destroy the CMOS devices in the drive, pay attention to the following points after unpacking:* • *Use an antistatic mat and wrist strap when handling the drive.* • *Hold the mounting frame when handling the drive. Do not touch the PCA except when setting the switches.* *4) When handling the drive, hold both sides of the mounting frame. When touching other than both sides of the mounting frame, avoid putting force.*	4-1
	5) Do not forcibly push up the end of the header pin of the printed circuit board unit when handling or setting the drive.	4-2

Task	Alert message	Page
Installation	*1) The user must not change the settings of terminals not described in this section. The terminals must remain as set when shipped* *2) Do not change terminal settings when the power is on.* *3) To strap setting terminals, use the jumper shipped with the drive.*	4-5
	1) Make sure that the system power is off. *2) Do not connect or disconnect any cable when the power is on.*	4-13
	1) Be careful of the insertion directions of SCSI connectors. For a system in which the terminating resistor power is supplied via the SCSI cable, connecting connectors in the wrong direction may cause the following: *The overcurrent protection fuse of the terminating resistor power supply (SCSI device) may blow when power is turned on.* *The cable may burn if overcurrent protection is not provided.* *2) Be careful of cable connector positions when connecting more than one SCSI device. The SCSI device having the terminating resitor must be connected to the end of the cable* *3) The cables must be kept away from the rotating part of the spindle motor*	4-14
	Before demounting the optical disk drive, turn off the system power. Do not remove screws securing the cables and drive when the power is on.	4-17
Cleaning cartridge	*Use the cleaning solution and cleaning cloth specified in Table 5.2. If other than the specified items is used, disk media surface may be damaged.* *Do not use this cleaning kit for the floppy disk or the optical disk cartridge used for other optical disk drive.*	5-10
	Clean the cartridge at clean place. Put a disposable groves at cleaning so that the figureprint does not put on the disk media (recommendation).	5-11
	At setting the cartridge to the setting case, do not apply the heavy shock and push hardly. *In case of contact with eyes, immediately flush eyes with water.*	5-12
Maintenance and Repair	*Data loss* *In case of regular repair, the optical disk cartridge should not be attached except where the cartridge causes the error. And before having the drive repaired, save the data in the cartiridge. Fujitsu is not responsible for data last during maintenance or repair.*	6-3

MANUAL ORGANIZATION

MCE3064SS/MCF3064SS OPTICAL DISK DRIVES PRODUCT MANUAL (C156-E097) <This manual>	• GENERAL DESCRIPTION • SPECIFICATIONS • INSTALLATION REQUIREMENTS • INSTALLATION • OPERATION AND CLEANING • DIAGNOSIS AND MAINTENANCE • SCSI BUS
MCE3064SS/MCF3064SS OPTICAL DISK DRIVES SCSI Logical Specifications (C156-E098)	• COMMAND PROCESSING • DATA BUFFER MANAGEMENT • COMMAND SPECIFICATIONS • SENSE DATA AND ERROR RECOVERY PROCEDURE • SCSI MESSAGES • ERROR RECOVERY
MCE3064SS/MCF3064SS OPTICAL DISK DRIVES MAINTENANCE MANUAL (C156-F030)	• MAINTENANCE AND DIAGNOSIS • FAULT ANALYSIS • REMOVAL AND REPLACEMENT PROCEDURES • PRINCIPLES OF OPERATION • CLEANING

REFERENCED STANDARDS

Item	Number	Name	Organization
1	ANSI X3.131-1986	American National Standard for Information Systems—Small Computer System Interface (SCSI)	American National Standards Institute (ANSI)
2	ANSI X3.131-1994	American National Standard for Information Systems—Small Computer System Interface-2 (SCSI-2)	American National Standards Institute (ANSI)
3	ISO/IEC 10090	90 mm optical disk cartridges, rewritable and read only, for data interchange	ISO/IEC JTC1*
4	ISO/IEC 13963	Data interchange om 90 mm optical disk cartridges, – Capacity: 230 megabytes per cartridge	ISO/IEC JTC1*
5	ISO/IEC 15041	Data interchange om 90 mm optical disk cartridges, – Capacity: 640 megabytes per cartridge	ISO/IEC JTC1*

*Note: ISO = International Organization for Standardization
IEC = International Electrical Commission
JTC1 = Joint Technical Commitee 1

CONTENTS

page

CHAPTER 1 GENERAL DESCRIPTION........1 - 1

1.1 Features........1 - 1
1.1.1 Performance........1 - 2
1.1.2 Reliability........1 - 3
1.1.3 Maintainability/operability........1 - 3
1.1.4 Adaptability........1 - 4
1.1.5 Interface........1 - 4
1.2 Drive Configuration........1 - 6
1.2.1 Drive model........1 - 6
1.2.2 Configuration........1 - 7
1.2.3 Mechanical sections........1 - 7
1.2.4 Control circuit section........1 - 8
1.3 System Configuration........1 - 10
1.3.1 SCSI bus configuration........1 - 10
1.3.2 Input-output device addressing........1 - 11

CHAPTER 2 SPECIFICATIONS........2 - 1

2.1 Optical Disk Drive Specifications........2 - 1
2.1.1 Model and product number........2 - 1
2.1.2 Drive specifications........2 - 2
2.1.3 Environmental and power requirements........2 - 5
2.1.4 Error rate........2 - 6
2.1.5 Reliability........2 - 7
2.2 SCSI Function Specification........2 - 8
2.3 Optical Disk Cartridge Specifications........2 - 15
2.3.1 Recommended optical disk cartridge specifications........2 - 15
2.3.2 Optical disk cartridge........2 - 16
2.3.3 Disk specifications........2 - 18
2.4 Defect Management........2 - 20
2.4.1 Defect management schematic diagram........2 - 20

CHAPTER 3 INSTALLATION REQUIREMENTS .... 3 - 1
3.1 Environmental Requirements .... 3 - 1
3.1.1 Temperature measurement point .... 3 - 1
3.1.2 Temperature requirements and measuring method .... 3 - 3
3.1.3 Air flow .... 3 - 3
3.1.4 Temperature rise under several conditions .... 3 - 4
3.1.5 Air purity .... 3 - 4
3.2 Mounting Requirements .... 3 - 5
3.2.1 External dimensions .... 3 - 5
3.2.2 Installation direction .... 3 - 7
3.2.3 Centers of gravity .... 3 - 8
3.2.4 Notes on mounting .... 3 - 9
3.3 Power Supply Requirements .... 3 - 11
3.4 Connection Requirement .... 3 - 14
3.4.1 Connectors and terminals .... 3 - 14
3.4.2 Cable connection requirements .... 3 - 17
3.4.3 External operator panel .... 3 - 22
3.4.4 External operator panel setting (CNH2) .... 3 - 25

CHAPTER 4 INSTALLATION .... 4 - 1
4.1 Notes on Drive Handling .... 4 - 1
4.2 Connection Modes .... 4 - 4
4.3 Settings .... 4 - 5
4.3.1 Setting switches (SW1) .... 4 - 7
4.3.2 Setting of supplying power to SCSI terminating resistor .... 4 - 10
4.3.3 SCSI terminating resistor mode .... 4 - 10
4.4 Mounting .... 4 - 12
4.4.1 Checks before mounting the drive .... 4 - 12
4.4.2 Mounting procedure .... 4 - 13
4.5 Cable Connections .... 4 - 13
4.6 Operation Confirmation and Preparation for Use after Installation .... 4 - 14
4.6.1 Confirming initial operations .... 4 - 14
4.6.2 SCSI connection check .... 4 - 15
4.7 Dismounting Drive .... 4 - 17

CHAPTER 5 OPERATION AND CLEANING .... 5 - 1
5.1 Operating Optical Disk Drive .... 5 - 1
5.1.1 Optical disk drive .... 5 - 1
5.1.2 Note .... 5 - 2
5.1.3 Inserting cartridge .... 5 - 2
5.1.4 Ejecting (removing) cartridge .... 5 - 4
5.2 Cleaning Drive .... 5 - 6
5.3 Optical Disk Cartridge Operation .... 5 - 7
5.3.1 Optical disk cartridge .... 5 - 7
5.3.2 Write protect tab .... 5 - 8
5.3.3 Notes .... 5 - 9
5.4 Cleaning Optical Disk Cartridge .... 5 - 9
5.4.1 Cleaning tool .... 5 - 9
5.4.2 Cleaning procedure .... 5 - 10

CHAPTER 6 DIAGNOSIS AND MAINTENANCE .... 6 - 1
6.1 Diagnosis .... 6 - 1
6.1.1 Initial self-diagnosis .... 6 - 2
6.1.2 Diagnostic command .... 6 - 2
6.1.3 Test program .... 6 - 2
6.2 Maintenance Information .... 6 - 3
6.2.1 Maintenance requirements .... 6 - 3
6.2.2 Revision number .... 6 - 4

CHAPTER 7 SCSI BUS .... 7 - 1
7.1 System Configuration .... 7 - 1
7.2 Interface Signal Definition .... 7 - 3
7.3 Electrical Requirements .... 7 - 6
7.3.1 SCSI interface .... 7 - 6
7.3.2 Power supply for terminating resistor .... 7 - 7
7.3.3 Signal driving conditions .... 7 - 8
7.4 Timing Rule .... 7 - 10
7.5 Bus Phases .... 7 - 13
7.5.1 BUS FREE phase .... 7 - 13
7.5.2 ARBITRATION phase .... 7 - 14
7.5.3 SELECTION phase .... 7 - 17

7.5.4 RESELECTION phase ....7 - 19
7.5.5 INFORMATION TRANSFER phases ....7 - 21
7.5.6 COMMAND phase ....7 - 30
7.5.7 DATA phase ....7 - 30
7.5.8 STATUS phase ....7 - 33
7.5.9 MESSAGE phase ....7 - 33
7.5.10 Signal requirements concerning transition between bus phases ....7 - 34
7.5.11 Time monitoring feature ....7 - 36
7.6 Bus Conditions ....7 - 37
7.6.1 ATTENTION condition ....7 - 37
7.6.2 RESET condition ....7 - 40
7.7 Bus Sequence ....7 - 42

Glossary ....GL - 1

Abbreviations ....AB - 1

Index ....IN - 1

FIGURES

page

1.1 MCE3064SS/MCF3064SS outer view (with panel)....1 - 6
1.2 MCE3064SS/MCF3064SS outer view (without panel) ....1 - 6
1.3 Optical disk drive configuration ....1 - 7
1.4 Control circuit section block diagram ....1 - 8
1.5 System configuration example ....1 - 10
2.1 Optical disk cartridge....2 - 16
2.2 Algorithms for alternate processing ....2 - 20
2.3 Example of alternate processing....2 - 21
3.1 Surface temperature measurement points....3 - 2
3.2 Dimensions ....3 - 5
3.3 Dimensions (without panel)....3 - 6
3.4 Installation directions ....3 - 7
3.5 Centers of gravity....3 - 8
3.6 Mounting frame structure ....3 - 9
3.7 Service clearance ....3 - 10
3.8 Current waveform (+5 VDC)....3 - 11
3.9 Power on/off sequence (1) ....3 - 11
3.10 Power on/off sequence (2) ....3 - 12
3.11 Power on/off sequence (3) ....3 - 12
3.12 AC noise filter (recommended) ....3 - 13
3.13 Connector and terminal locations....3 - 14
3.14 Power supply connector....3 - 15
3.15 SCSI interface connector (drive side)....3 - 15
3.16 Cable connection mode....3 - 17
3.17 SCSI cable connector....3 - 19
3.18 SCSI cable connection....3 - 21
3.19 External operator panel circuit example....3 - 23
3.20 External operator panel interface connector....3 - 24
4.1 Packaging style ....4 - 3
4.2 SCSI bus connection modes ....4 - 4
4.3 Positions of setting terminals and switches....4 - 6
4.4 Setting switch (SW1)....4 - 7

4.5 SCSI connection check ....4 - 16
5.1 Optical disk drive front view (with panel) ....5 - 1
5.2 Inserting cartridge ....5 - 4
5.3 Removing cartridge ....5 - 5
5.4 Optial disk cartridge ....5 - 7
5.5 Write protect tab ....5 - 8
5.6 Cleaning procedure (1) ....5 - 11
5.7 Cleaning procedure (2) ....5 - 11
5.8 Cleaning procedure (3) ....5 - 12
5.9 Cleaning procedure (4) ....5 - 13
6.1 Revision label ....6 - 4
6.2 Revision number indication....6 - 4
7.1 Example of SCSI configuration....7 - 2
7.2 Interface signals ....7 - 3
7.3 DATA BUS and SCSI ID ....7 - 4
7.4 SCSI termination circuit ....7 - 7
7.5 BUS FREE phase....7 - 14
7.6 ARBITRATION phase ....7 - 16
7.7 SELECTION phase ....7 - 18
7.8 RESELECTION phase ....7 - 20
7.9 INFORMATION TRANSFER phase (phase control) ....7 - 22
7.10 Transfer in asynchronous mode....7 - 24
7.11 Transfer in synchronous mode....7 - 28
7.12 Transfer in FAST SCSI mode....7 - 29
7.13 Data transfer rate in asynchronous mode ....7 - 31
7.14 Data transfer rate in synchronous mode ....7 - 33
7.15 Switching direction of transfer over the data bus....7 - 35
7.16 ATTENTION condition....7 - 39
7.17 RESET condition ....7 - 41
7.18 Bus phase sequence ....7 - 43
7.19 Example of bus phase transition on execution of a single command ....7 - 45

TABLES

		page
2.1	Model and order number	2 - 1
2.2	Specifications	2 - 2
2.3	Environmental and power requirements	2 - 5
2.4	SCSI function specifications	2 - 8
2.5	Recommended optical disk cartridge specifications	2 - 15
2.6	Disk specifications	2 - 18
3.1	Temperature requirements at measurement points	3 - 3
3.2	Temperature at each measuring point (Reference)	3 - 4
3.3	Signal assignment of SCSI connector	3 - 16
3.4	Recommended components for connection	3 - 18
3.5	SCSI cable requirememts	3 - 20
3.6	External operator panel interface	3 - 24
3.7	Device type mode setting	3 - 25
3.8	SCAM mode setting	3 - 25
3.9	Write verify mode setting	3 - 26
3.10	Macintosh mode setting	3 - 26
3.11	Logical specification type setting	3 - 27
4.1	SCSI ID setting (SW1)	4 - 8
4.2	SCSI data bus parity checking (SW1)	4 - 8
4.3	Write cache mode setting	4 - 9
4.4	Device type mode setting	4 - 9
4.5	Spindle automatic stop mode setting	4 - 10
4.6	SCSI terminating resistor power supply (CNH1)	4 - 10
4.7	SCSI terminating resistor mode (CNH1)	4 - 11
4.8	Setting checklist	4 - 12
5.1	Head cleaner	5 - 6
5.2	Cleaning kit	5 - 9
5.3	Packaged items (cleaning kit)	5 - 10
6.1	Self-diagnostic function	6 - 1
7.1	INFORMATION TRANSFER phase identification	7 - 6
7.2	Requirements for terminating resistor power supply	7 - 7
7.3	Signal status	7 - 8

7.4 Signal driving method....7 - 8
7.5 Bus phases and signal sources....7 - 9
7.6 Timing specifications....7 - 10
7.7 FAST SCSI Timing specifications....7 - 12
7.8 Parameters used for synchronous data transfer....7 - 32
7.9 Setting value of SCSI time monitoring....7 - 36

CHAPTER 1 GENERAL DESCRIPTION

1.1 Features

1.2 Drive Configuration

1.3 System Configuration

This chapter describes the features and configuration of the optical disk drives.

The MCE3064SS/MCF3064SS (hereafter optical disk drive) are disks that maintain the compatibility and intend high speed as the succeed drive of the the MCB3064SS/MCC3064SS.

The MCE3064SS/MCF3064SS are high-performance, 3.5-inch commutative rewritable optical disk drives which incorporate an SCSI controller.

The interface connecting the MCE3064SS/MCF3064SS drives to the host system complies with the Single-Ended SCSI-2 standard (ANSI X3T9.2/86-109: Small Computer System Interface-2).

The flexibility and expandability of the SCSI, the high performance of the MCE3064SS/MCF3064SS optical disk drives, and the drives' commands set enable the user to construct high-reliability, high-performance disk subsystems with advanced functions and large-scale storage.

1.1 Features

This section describes the following drive features:

- Performance
- Reliability
- Maintainability/operability
- Adaptability
- Interface

1.1.1 Performance

(1) Half-height standard 3.5-inch size (1-inch height)

The SCSI controller can be directly connected to the system SCSI bus. The controller meets the specifications of the standard 1-inch height 3.5-inch fixed disk drive form factor.

(2) High-speed data transfer

- The rpm of the MCE3064SS disk medium is 4558 rpm and MCF3064SS disk medium is 3600 rpm.
- The disk drive is capable of 2.94 to 4.9 MB/sec (640 MB) high-speed data transfer.

Note:

The maximum data transfer rate in asynchronous transfer mode may be limited by the initiator response time and SCSI bus cable length. The maximum data transfer rate through a single-ended SCSI bus in synchronous transfer mode is limited also by the SCSI bus cable length and transfer features.

(3) High-speed mean seek time

This drive features a linear voice-coil motor for high-speed head positioning. The average seek time is the average of 1,000 random seeks and is 23 ms (128 MB, 230 MB, 540 MB, and 640 MB). (However, this does not include SCSI overhead or address check.)

(4) ISO standard (medium compatibility)

3.5-inch, cartridge-type, 128-MB, 230-MB, 540-MB, and 640-MB rewritable disks that comply with the ISO standard can be used.

(5) Partial ROM/O-ROM optical media support

This drive can handle the partical ROM media, that means an ROM area is established as a part of rewritable area, and O-ROM media.

(6) Direct-overwrite medium support

An optical disk drive can use an optic modulation direct-overwritten medium that does not read an erase operation: 540-MB disk and 640-MB disk that comply with the ISO standard and 230-MB disk.

(7) Dust resistance

Through low power consumption, a cooling fan is rendered unnecessary in the optical disk drive, and through the use of a film on the top and a metal plate on the bottom that excludes dust, a simple, protective sealed construction is realized. This device is compliant with standards for use in a Class 5 millions or lower dust environment.

(8) Lower power consumption

The power consumption of the optical disk drive is 4.9 W (at read/write). The minimum power consumption is 0.5 W during power save.

(9) Automatic spindle stop function

If access is not made within a certain time, this function stops disk rotation to minimize dust accumulation on the disk. This function can be set that time by the MODE SELECT command.

1.1.2 Reliability

(1) Mean time between failure (MTBF)

This drive features a 120,000 hour MTBF.

(2) Error recovery

For the error depending on the optical disk drive, an recovery process is made by a suitable retry. This drive features Reed-Solomon error correction (ECC) to assure error-free operation.

(3) Automatic allocation of alternate data blocks

This drive features a function which automatically allocates alternate data blocks to defective data blocks detected while data is being read from or written to an optical disk.

1.1.3 Maintainability/operability

(1) Diagnostic function

This drive has a diagnostic function to check optical disk drive operations. The diagnostic function facilitates test and restoration.

1.1.4 Adaptability

(1) Wide operating environment

An LSI circuits reduce power consumption to 4.9 W (read/write). This drive features a wide operating environment (drive envronment 5 to 45°C or larger than general office environment). Dust particles are class 5 millions or less.

(2) Low noise and low vibration

This drive operates quietly (26 dBA or less) even during seek operations and will not degrade the office environment. Rubber vibration isolators support the drive and minimize vibration.

(3) Vibration resistance (shock resistance)

Rubber vibration isolators protect the drive against external shock or vibration.

(4) Safety standards

- UL1950 (U.S.A., safety)
- CDRH class 1 (U.S.A., laser)
- CSA C22.2 No. 950 (Canada, safety)
- EN60950 (Europe, safety)
- EN60825 Class 1 (Europe, laser)

(5) Various radio wave standards

This optical disk device is installed in a host system, and meets the following standards:

- EN55022 class B, EN50082-1 (European wave standards)
- AS/NZS3548 class B (Australian wave standards)

1.1.5 Interface

(1) SCSI-2

This drive supports the basic SCSI-2 specifications.

SCSI commands enable operation using logical block addresses that are independent of the physical attributes of the drive, enabling software flexibility in terms of system expansion.

(2) Continuous block processing

Logical block addresses are used for data block addressing. Without consideration of the physical attributes of track boundaries, the initiator can access data by specifying a block number in logically continuous data space.

(3) Mass storage data buffer

2,016 KB buffer is used to transfer data between the SCSI bus and disk. Since data is stored in this buffer, the initiator can execute input-output processing effectively by using the high-speed data transfer capability of the SCSI bus without regard to the data transfer rate of the optical disk drive.

(4) Read-ahead cache feature

The read-ahead cache feature enables high-speed sequential data access as follows:

After executing a command to read data from the disk, the drive automatically reads the next data block and stores it in the data buffer (pre-reading). If the next command requests this data, the data is transferred from the buffer without another disk access.

(5) Write cache feature

When the host system issues the write command to the optical disk drive, a command complete is usally responded after completion of the write and verify operations. By using the write cache feature, a command complete is responded after completion of the data transfer to the data buffer without waiting the completion of the write and verify operations then the write and verify operations are made asychronouslly with the SCSI operation. Therefore, the apparent write command processing time measured at the host system is reduced and the I/O performance of the host system is improved.

The write cache teature is enabled or disabled by the setting swich.

IMPORTANT

Cautions When Using the Write Cache
When the write cache function is activated, a write error is reported when the end status is indicated for a command different from and subsequent to the specified command. If the initiator executes only an error report command retry, the data in the block where the error occurred will not be written correctly, so caution is necessary..

(6) Reserve and release functions

Reserve and release functions permit exclusive access control in multihost or multi-initiator environments.

(7) Defective block slipping

When a disk is initialized, logical data blocks are reallocated in a physical sequence by slipping defective data blocks. This enables high-speed continuous data block processing without rotational delay due to defective data blocks.

1.2 Drive Configuration

1.2.1 Drive model

Figures 1.1 to 1.3 show the MCE3064SS/MCF3064SS outer view.

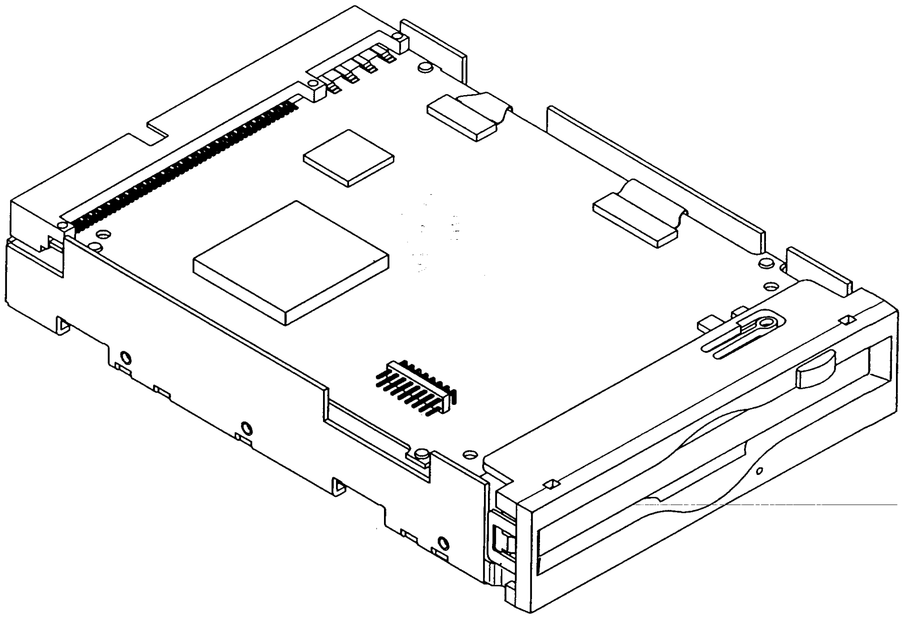

Figure 1.1 MCE3064SS/MCF3064SS outer view (With panel)

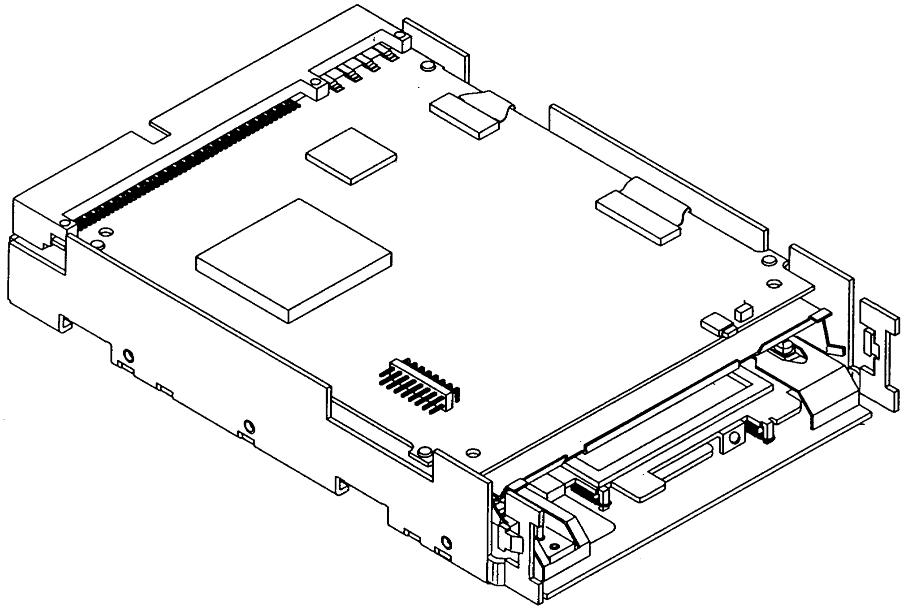

Figure 1.2 MCE3064SS/MCF3064SS outer view (Without panel)

1.2.2 Configuration

Figure 1.3 shows the drive configuration.

The drive consists of mechanical sections, a fixed optics section, actuator, and a control circuit section. The mechanical sections include the spindle motor, actuator section, bias magnet, and the cartridge folder vertical motion mechanism.

The fixed optics section consists of the optical components, position detector, and LD controller.

The control circuit sections include the drive control circuit section and SCSI controller section.

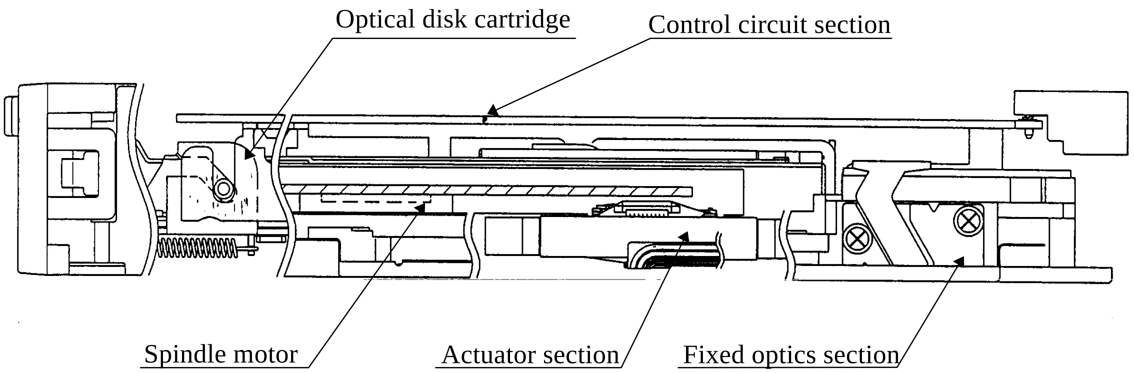

Figure 1.3 Optical disk drive configuration

1.2.3 Mechanical sections

(1) Optical disk cartridge load/eject

The system includes a cartridge mechanism which lowers the optical disk cartridge and mounts (loads) it on the spindle motor automatically when the optical disk cartridge is fully inserted in the optical disk drive's disk slot, and a mechanism which automatically ejects the cartridge when the Eject button on the front panel is pressed.

(2) Spindle motor

The optical disk cartridge's hub and the spindle motor's shaft are connected magnetically. Therefore, if the spindle motor's shaft is rotating, the disk medium is rotating at the same speed. A DC brushless motor is used for this spindle motor. It realizes high speed rotation at 4558 rpm for MCE3064SS and 3600 rpm for MCF3064SS, and a high precision rotating system (±0.1%).

(3) Actuator section

The positioner moves (seeks) a head actuator radially across the disk surface.

The positioner is driven by a linear voice coil motor. A pulse-width modulation (PWM) is adopted as a driving system and realizes low power consumption and high-speed access.

(4) Separate optical sections

The optical head section is separated in such a way that the fixed optics section is separated from the moving optics section to minimize seek time and positioning error. (See Subsection 1.2.4 for the fixed optical section.) This reduces the weight of the moving parts.

The fixed optical section consists of the laser diodes, collimator lens, and optical detector.

The laser diode for recording and playback, and transmits one laser beam to the actuator section.

(5) Panel

The central part of the panel is hollowed out deeply to provide pushing finger space for inserting the cartridge, thereby facilitating the insertion.

The panel is also simply designed by making the eject button and LED light emitting part integral with each other.

1.2.4 Control circuit section

Figure 1.4 is the block diagram of the control circuit section.

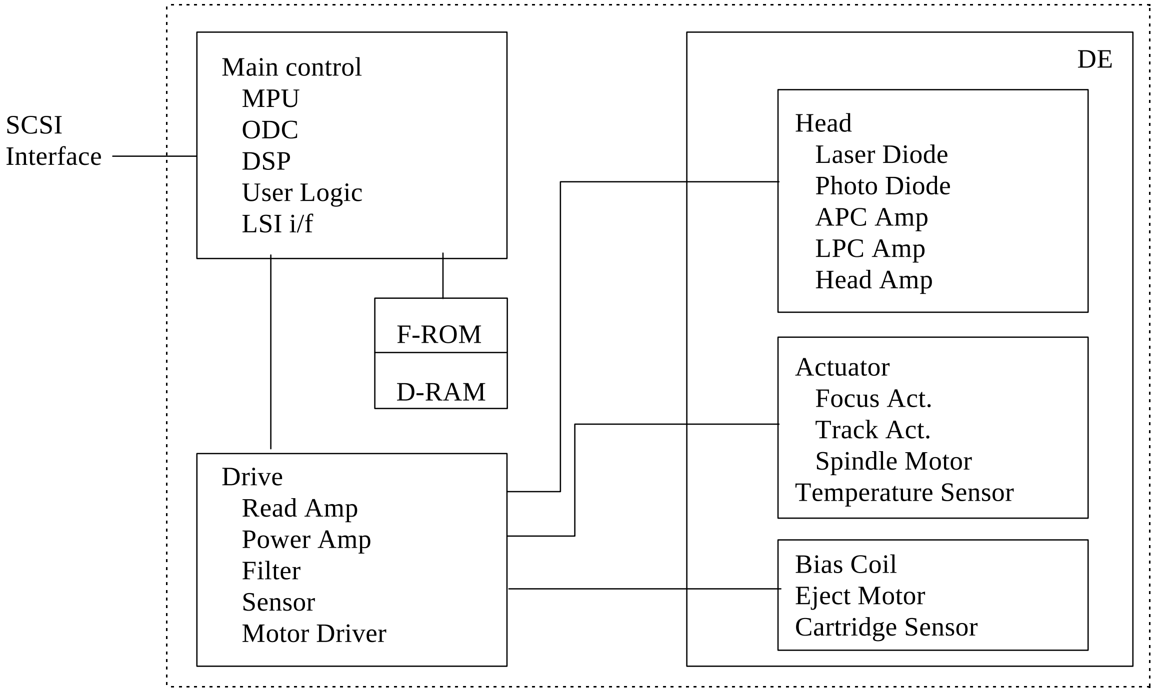

Figure 1.4 Control circuit section block diagram

The control circuit section is divided into two parts: an SCSI controller section which deals with control between the SCSI interface and drive interface, and a drive circuit section which controls the drive.

(1) SCSI controller circuit section

The SCSI controller circuit's reliability is improved by large-scale integrated circuit technology. The high-speed microprocessor (MPU) handles SCSI interface control and drive control such as drive read-and-write control and single-beam control.

(2) Drive circuit section

The drive circuit section consists of the following circuits:

- Laser diode control circuit
- Signal reproduction circuit
- Servo/seek control circuit
- Rotation control circuit
- Drive miscellaneous control circuit

The DSP (digital signal processor) is used for the servo/seek control circuit to reduce the circuit amount, therefore this circuit is a simple configuration.

The drive circuit section executes operations such as seek, erase, record, and playback while the MPU controls the focus-tracking of the beam.

1.3 System Configuration

An optical disk drive connected to the system SCSI bus always operates as a target. Figure 1.5 is a system configuration example. Through the SCSI bus, the optical disk drive executes the input-output operation specified by the SCSI device that operates as the initiator.

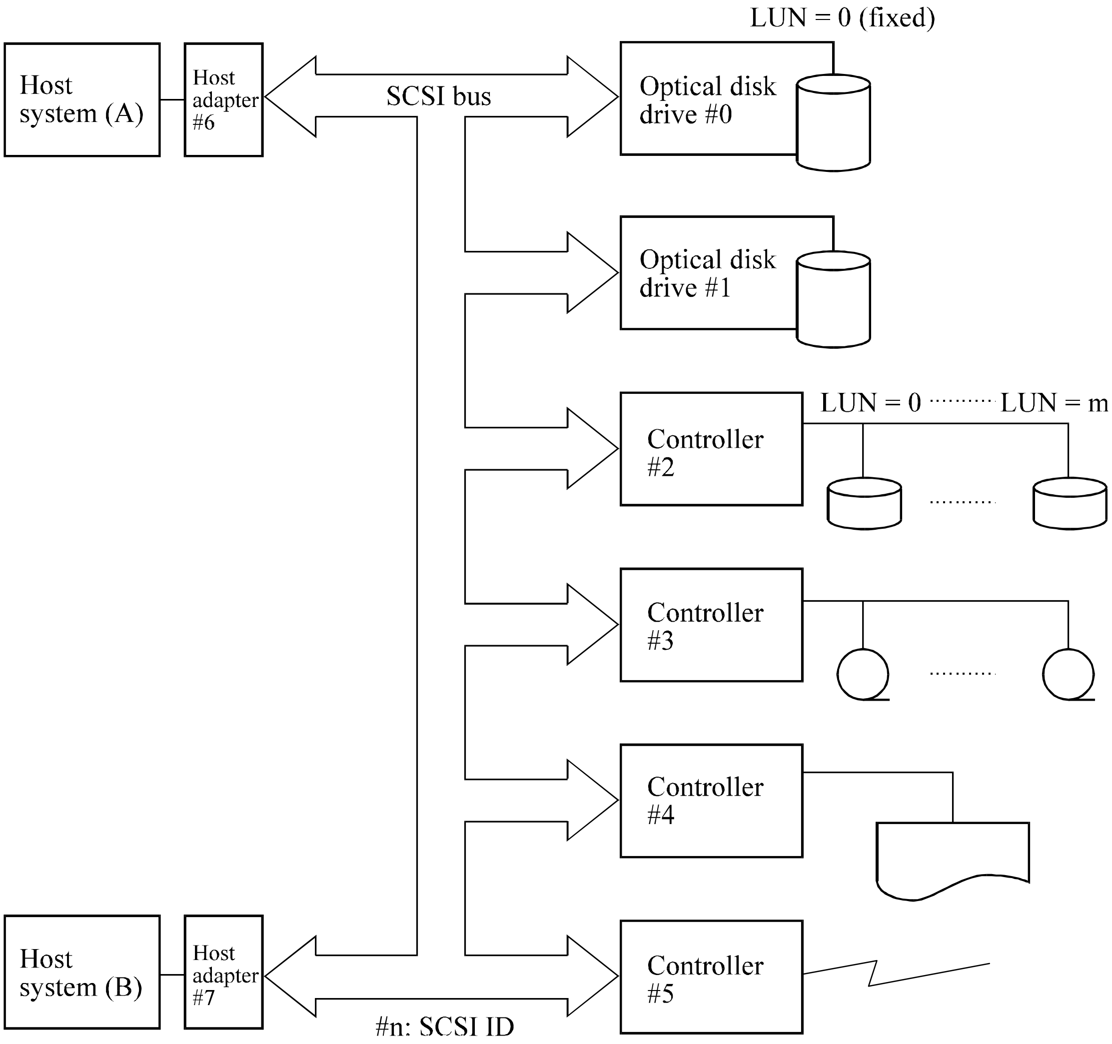

Figure 1.5 System configuration example

1.3.1 SCSI bus configuration

A maximum of eight SCSI devices can be connected to the SCSI bus. The combination of an SCSI device operating as an initiator and an SCSI device operating as a target is arbitrary. A multihost system can be configured in which several host systems operate as initiators.

The disconnect or reconnect function enables input-output processing in parallel through more than one SCSI device.

1.3.2 Input-output device addressing

A unique device address (SCSI ID: #n in Figure 1.5) is assigned to each SCSI device. Input-output devices connected to or under an SCSI device operating as a target are accessed in logical units. A unique device address (LUN: logical unit number) is assigned to each logical unit.

An initiator specifies an SCSI ID to select an SCSI device operating as a target, then specifies an LUN to select the input-output device connected to or under the target.

An optical disk drive is constructed with all volumes as a single logical unit. Specifiable SCSI IDs and LUN are as follows:

- SCSI ID: #0 to #7 selectable (setting terminal or external input)
- LUN: #0 (fixed)

This page is intentionally left blank.

CHAPTER 2 SPECIFICATIONS

2.1 Optical Disk Drive Specifications

2.2 SCSI Function Specification

2.3 Optical Disk Cartridge Specifications

2.4 Defect Management

This chapter contains the specifications of the optical disk drive, SCSI functions, and the optical disk cartridge.

2.1 Optical Disk Drive Specifications

2.1.1 Model and product number

The model names MCE3064SS/MCF3064SS represent optical disk drives using 128MB, 230MB, 540MB, and 640MB media.

These drives were designed for single-ended SCSI operation. Table 2.1 lists the model and order number.

Table 2.1 Model and order number

Model	Order number	Panel	Panel color	Mounting screw	Cache size
MCE3064SS	CA01747-B101	With panel	Light gray (2.5Y 7.2/0.4)	Inch screw (32UNC)	2 MB
MCF3064SS	CA05437-B101	With panel	Light gray (2.5Y 7.2/0.4)	Inch screw (32UNC)	2 MB

Remarks: The panel colors (2.5Y 7.2/0.4) are indicated in Munsell symbols. (JIS28721)

2.1.2 Drive specifications

Table 2.2 lists MCE3064SS/MCF3064SS drives specifications

Table 2.2 Specifications (1 of 4)

For MCE3064SS

Item		Specifications			
Optical disk cartridge		128 MB media	230 MB media	540 MB media	640 MB media
Total capacity	Unformatted	181 MB	325 MB	819 MB	818 MB
	Formatted	128 MB	230 MB	538 MB	643 MB
Capacity/track	Unformatted	18,100 bytes	18,100 bytes (logical track capacity)	19,450 bytes (logical track capacity)	43,928 bytes (logical track capacity)
	Formatted	12,800 bytes	12,800 bytes (logical track capacity)	12,800 bytes (logical track capacity)	34,816 bytes (logical track capacity)
Capacity/sector	Unformatted	725 bytes		778 bytes	2,584 bytes
	Formatted	512 bytes			2,048 bytes
Number of user tracks/side (*1)		10,000	17,940	42,042	18,480
Number of alternate sectors/side		≤1,024	≤1,025	≤2,250	≤2,244
Number of sectors/track		25			17
Data transfer rate		1.37 MB/s (max.) 0.32 MB/s continuous writing (execution) 0.97 MB/s continuous reading (execution)	1.65 to 2.65 MB/s (max.) 0.39 to 0.62 MB/s continuous writing (execution) 1.16 to 1.86 MB/s continuous reading (execution)	2.95 to 4.96 MB/s (max.) 0.64 to 1.08 MB/s continuous writing (execution) 1.92 to 3.26 MB/s continuous reading (execution)	2.94 to 4.90 MB/s (max.) 0.77 to 1.29 MB/s continuous writing (execution) 2.33 to 3.88 MB/s continuous reading (execution)
Random seek time (*2)		23 ms typ			
Average latency		6.6 ms			
Rotational speed		4,558 rpm ±0.1%			
Heads		One-head on the positioner			
Positioner type		Linear voice coil motor			
Servo tracking method		ISO continuous servo method			
Density		24,424 bpi (1.04μm/bit) 15,875 tpi	29,308 bpi (0.87μm/bit) 18,275 tpi	52,900 bpi 23,090 tpi	
Loading time (*3)		7 sec.			
Unloading time (*4)		4 sec.			
Load/unload life		20,000			
Host interface		SCSI-2 (Single-ended) Unshielded 50-contact connector Terminating resistor provided			
Data transfer rate (*5)		Synchronous mode: 20 MB/s (max.) Asynchronous mode: 5 MB/s (max.)			
Data buffer		2,016 KB			
Error correction (*6)		Correctable up to 8-byte/interleave Bit error rate: 10^{-12} less			

Table 2.2 Specifications (2 of 4)

For MCF3064SS

Item		Specifications			
Optical disk cartridge		128 MB media	230 MB media	540 MB media	640 MB media
Total capacity	Unformatted	181 MB	325 MB	819 MB	818 MB
	Formatted	128 MB	230 MB	538 MB	643 MB
Capacity/track	Unformatted	18,100 bytes	18,100 bytes (logical track capacity)	19,450 bytes (logical track capacity)	43,928 bytes (logical track capacity)
	Formatted	12,800 bytes	12,800 bytes (logical track capacity)	12,800 bytes (logical track capacity)	34,816 bytes (logical track capacity)
Capacity/sector	Unformatted	725 bytes		778 bytes	2,584 bytes
	Formatted	512 bytes			2,048 bytes
Number of user tracks/side (*1)		10,000	17,940	42,042	18,480
Number of alternate sectors/side		≤1,024	≤1,025	≤2,250	≤2,244
Number of sectors/track		25			17
Data transfer rate		1.09 MB/s (max.) 0.25 MB/s continuous writing (execution) 0.76 MB/s continuous reading (execution)	1.3 to 2.1 MB/s (max.) 0.31 to 0.49 MB/s continuous writing (execution) 0.92 to 1.47 MB/s continuous reading (execution)	2.33 to 3.92 MB/s (max.) 0.51 to 0.86 MB/s continuous writing (execution) 1.52 to 2.58 MB/s continuous reading (execution)	2.32 to 3.87 MB/s (max.) 0.61 to 1.02 MB/s continuous writing (execution) 1.84 to 3.07 MB/s continuous reading (execution)
Random seek time (*2)		23 ms typ			
Average latency		8.3 ms			
Rotational speed		3,600 rpm ±0.1%			
Heads		One-head on the positioner			
Positioner type		Linear voice coil motor			
Servo tracking method		ISO continuous servo method			
Density		24,424 bpi (1.04μm/bit) 15,875 tpi	29,308 bpi (0.87μm/bit) 18,275 tpi	52,900 bpi 23,090 tpi	
Loading time (*3)		7 sec.			
Unloading time (*4)		4 sec.			
Load/unload life		20,000			
Host interface		SCSI-2 (Single-ended) Unshielded 50-contact connector Terminating resistor provided			
Data transfer rate (*5)		Synchronous mode: 20 MB/s (max.) Asynchronous mode: 5 MB/s (max.)			
Data buffer		2,016 KB			
Error correction (*6)		Correctable up to 8-byte/interleave Bit error rate: 10^{-12} less			

Table 2.2 Specifications (3 of 4)

*1 The number of user tracks indicates the maximum user zone which includes the spare area and slipping area.

*2 Mathematical average of 1,000 times of seek and does not include SCSI overhead nor track address recognition time. Furthermore, it may reach a maximum of 35 ms depending on the quality of media and drive installation environment.

*3 Loading time is the time from when the optical disk cartridge is inserted to when the optical disk drive is ready.

*4 Unloading time is the time from when the eject button is pressed or the eject command is issued to when the optical disk cartridge is ejected.

*5 The maximum SCSI data transfer rate may be limited by the initiator response time, SCSI bus transfer characteristics, or transfer distance.

*6 The bit error rate must be 10^{-12} or less when a disk whose raw error rate is 10^{-4} or less is used.

Table 2.2 Specifications (4 of 4)

Power save mode

Power save mode	1	2	3
Time for entering power save mode (continuous time without accessing from SCSI)	2 sec.	5 min.	33 min.
Power consumption (*7)	3.2 W	1.8 W	0.5 W
Returning time to normal mode (*7)	20 ms	1.0 sec.	5.0 sec.

Power save mode 1: Read amp
Power save mode 2: Servo off
Power save mode 3: Spindle off, LD off

*7 Average values in case of environment of a temperature of 25°C, voltage of 5 V and with terminating resistor turned off.

2.1.3 Environmental and power requirements

Table 2.3 lists the environmental and power requirements.

Table 2.3 Environmental and power requirements (1 of 2)

Item		Specification
Power requirements	Average	+5 VDC±5%, 1.1 A (2.5 A Max., excluded for terminating resistor) (*1)
Power consumption	Ready	3.9 W (*2)
	Random seek, read, or write (*2)	4.9 W (TYP) (*2)
	Power save	0.5 W (MIN) (*2)
Dimensions (W×D×H)	With panel	101.6×150.0×25.4 mm
	Without panel	101.6×148.4×25.4 mm
Weight		470 g (with panel)
Environmental requirements	Operating	Temperature: 5 to 45 °C (*3) (gradient 15 °C /h or less) Relative humidity: 10 to 85% (Noncondensing) Max. wet bulb temperature: 29 °C or lower
	Idle	Temperature: 0 to 50 °C Relative humidity: 10 to 85 % (Noncondensing) Max. wet bulb temperature: 36 °C or lower
	Transport	Temperature: –40 to 60°C (24 hours or less) Temperature: –20 to 60°C (24 hours or more) Relative humidity: 5 to 90% (Noncondensing) Max. wet bulb temperature: 41 °C or lower Requirement: Packing conditions specified by Fujitsu
Installation	Tilt angle	–5° to +10°
Vibration/ shock	Operating	0.4 G (5 to 500 Hz, sine sweep) Shock 2 G (10ms, half-sine pulse)
	Idle No cartridge, power ON	1.0 G (5 to 500 Hz, sine sweep) Shock 5 G (10 ms, half-sine pulse)
	Transport	Shock 50 G (10 ms, half-sine pulse) Requirement: Packing conditions specified by Fujitsu
Altitude	Operating	3,000 m (10,000 ft) or less
	Idle	12,000 m (40,000 ft) or less

Table 2.3 Environmental and power requirements (2 of 2)

Item		Specification
Ambient for purity	Air flow (*3)	Unused
	Air purity	General office environment or better (dust perticles: Class 5 millions or less)

Note:

1. Current limiter value for +5 VDC power: 5 A or less

2. Specifications under transporting condition are under the packaging specified by Fujitsu.

3. A voltage drop may occur depending on the used power supply or power cable.

*1 At random seek or read/write. Excluding pulse waveform under 500 µs or less.
*2 It demonstrates a power of 5.3 W in an installation environment of a temperature of 25°C, voltage of 5 V and with terminating resistor turned off.
*3 The efficiency is specified in an environment of a temperature of 25°C and 0° horizontal level placement.
*4 For details, refer to section 3.1.3 ‘Air Flow’

2.1.4 Error rate

Data blocks to be accessed are evenly distributed on the disk. Errors due to disk defects are not included.

(1) Bit error rate after ECC processing

The error rate after ECC processing must be 10^{-12} or less. An optical disk cartridge whose raw error rate is 10^{-4} or less should be used.

(2) Positioning error rate

The positioning error rate must be 10^{-6} or less. (with retry)

2.1.5 Reliability

(1) Mean time between failures (MTBF)

The MTBF is 120,000 hours or more. Failure due to disk errors is not included.

Conditions

- Power-on time: 200 hours/month or less
- LD-on time: 20% or less of power-on time
- Environment Temp.: 25°C

Note:

The MTBF is defined as follows:

$$\text{MTBF} = \frac{\text{total operating time in all fields (hours)}}{\text{number of device failure in all fields}}$$

1) Operating time is the total time power is applied.

2) Device failures indicate that devices require repair, readjustment, or replacement. Failure due to external factors such as minor defects during device handling, operation outside environmental specifications, power failure, host system errors, and interface cable errors are not included.

(2) Data security at power failure

Except for the data of the block to which write operation is in progress, all data on the disk is secure from power failure. This does not apply if power failure occurs during disk initialization (formatting) or defect processing (alternate block allocation).

2.2 SCSI Function Specification

Table 2.4 shows the SCSI functions of the optical disk drive. Refer to “SCSI Logical Interface Specifications” for details on each functions.

Table 2.4 SCSI function specifications (1 of 7)

×: Supported
–: Not supported

Item		Specification
Electrical requirement	Single-ended	×
	TERMPWR signal supply/demand function	×Jumper selectable
	Terminating resistor On/Off function	×Jumper selectable
Connector	Nonshielded	×(Protect key provided)
Data bus parity		×Switch selectable
Bus arbitration function		×
Disconnection/Reconnection function		×
Addressing	SCSI ID	#0 to #7 Switch selectable
	LUN (Logical unit number)	#0 is Fixed
Data transfer	Asynchronous mode	×5 MB/s Max.
	Synchronous mode	×20 MB/s Max.
Data buffer		2,016 KB
Data block length		512 bytes, 2,048 bytes
SCSI-1		×
SCSI-2		×

Table 2.4 SCSI function specifications (2 of 7)

×: Supported
–: Not supported

Item			Specification
1-byte message	COMMAND COMPLETE X’00’		×
	SAVE DATA POINTER X’02’		×
	RESTORE POINTERS X’03’		×
	DISCONNECT X’04’	(TARG → INIT)	×
		(INIT → TARG)	–
	INITIATOR DETECTED ERROR X’05’		×
	ABORT X’06’		×
	MESSAGE REJECT X’07’		×
	NO OPERATION X’08’		×
	MESSAGE PARITY ERROR X’09’		×
	LINKED COMMAND COMPLETE X’0A’		×
	LINKED COMMAND COMPLETE WITH FLAG X’0B’		×
	BUS DEVICE RESET X’0C’		×
	CLEAR QUEUE X’0E’		×
	INITIATE RECOVERY X’0F’		–
	TERMINATE I/O PROSESS X’11’		–
	IDENTIFY X’80 to ‘FF’		×
	Disconnect Privilege (Disk Priv) Bit		×
	Logical Unit Target (LUNTAR) Bit		–
2-byte message	ABORT TAG X’0D’		–
	SIMPLE QUEUE TAG X’20’		×
	HEAD OF QUEUE TAG X’21’		×
	ORDERED QUEUE TAG X’22’		×
	IGNORE WIDE RESIDUE X’23’		–

Table 2.4 SCSI function specifications (3 of 7)

×: Supported
–: Not supported

Item			Specification
Extended message	MODIFY DATA POINTER	X’01’ to ’00’	–
	SYNCHRONUS DATA TRANSFER REQUEST	X’01’ to ’01’	×
	EXTENDED IDENTIFY	X’01’ to ’02’	–
	WIDE DATA TRANSFER REQUEST	X’01’ to ’03’	–
Command (group 0)	TEST UNIT READY	X’00’	×
	REZERO UNIT	X’01’	×
	REQUEST SENSE	X’03’	×
	FORM UNIT	X’04’	×
	FmtData(Format Data)	=0	×
	Interleave factor		×(Non-interleaved)
	Defect list by block address	=0	×
	Defect list by block address	≠0	–
	Defect list by byte length from Index	=0	–
	Defect list by byte length from Index	≠0	–
	Defect list by physical sector address	=0	–
	Defect list by physical sector address	≠0	–
	CmpLst (complete list)		–
	FOV (format options valid)		×
	DPRY (disable primary)		–
	DCRT (disable certification)		×
	STPF (stop format)		–
	IP (initialize pattern)		×
	DSP (disable saving pattern)		–
	Immed (immediate)		–

Table 2.4 SCSI function specifications (4 of 7)

×: Supported
–: Not supported

Item			Specification
Command (group 0)	REASSIGM BLOCKS	X’07’	×
	READ	X’08’	×
	ERASE [VU]*1	X’09’	×
	WRITE	X’0A’	×
	SEEK	X’0B’	×
	INQUIRY	X’12’	×
	EVPD (enable vital product data)	≠0	–
	Standard inquiry data		× (64 bytes)
	MODE SELECT	X’15’	×
	PF (page format)	≠0	× (Non-interleaved)
	page X’01’ : Error recovery parameters		×
	page X’20’ : Format parameters		×
	SP (save page)		×
	RESERVE	X’16’	×
	Extent Reservation Option		–
	RELEASE	X’17’	×
	Extent Reservation Option		–
	COPY	X’18’	–
	MODE SENSE	X’1A’	×
	DBD (disable block descriptor)		–
	START/STOP UNIT	X’1B’	×
	immed (immediate)		×
	RECEIVE DIAGNOSTIC RESULTS	X’1C’	×
	SEND DIAGNOSTIC	X’1D’	×
	PREVENT/ALLOW MEDIUM REMOVAL	X’1E’	×

*1 FUJITSU unique function

Table 2.4 SCSI function specfications (5 of 7)

×: Supported
–: Not supported

Item				Specification
Command (group 1)	READ CAPACITY		X'25'	×
	RMI (partial medium indicator)			×
	READ		X'28'	×
	ERASE	[VU]*1	X'29'	×
	WRITE		X'2A'	×
	EBP (erase bypass)			×
	SEEK		X'2B'	×
	ERASE		X'2C'	×
	READ UPDATE BLOCK		X'2D'	–
	WRITE AND VERIFY		X'2E'	×
	DPO (disable page out)			–
	EBP (erase bypass)			×
	BytChk (byte check)			–
	VERIFY		X'2F'	×
	SEARCH DATA HIGH		X'30'	–
	SEARCH DATA EQUAL		X'31'	–
	SEARCH DATA LOW		X'32'	–
	SET LIMITS		X'33'	–
	PRE-FETCH		X'34'	–
	SYNCHRONIZE CACHE		X'35'	–
	LOCK/UNLOCK CACHE		X'36'	–
	READ DEFECT DATA		X'37'	×
	PList			×
	GList			×
	Defect List Format		≠0	×

*1 FUJITSU unique function

Table 2.4 SCSI function specfications (6 of 7)

×: Supported
–: Not supported

Item			Specification
Command (group 1)	MEDIUM SCAN	X'38'	–
	COMPARE	X'39'	–
	COPY AND VERIFY	X'3A'	–
	WRITE BUFFER	X'3B'	×
	MODE [VU]*1		–
	Buffer ID	=0	–
	READ BUFFER	X'3C'	×
	MODE [VU]*1		–
	Buffer ID	≠0	–
	UPDATE BLOCK	X'3D'	–
	READ LONG	X'3E'	×
	CORRECT	≠0	–
	WRITE LONG	X'3F'	×
Command (group 2)	CHANGE DIFINITION	X'40'	–
	LOG SELECT	X'4C'	×
	PCR (parameter code reset)		×
	SP (save parameter)	≠0	–
	PC (page control)	≠01b	–
	LOG SENSE	X'4D'	×
	PPC (parameter pointer control)	≠0	–
	SP (save parameter)	≠0	–
	PC (page control)	≠01b	–
	page X '00' (Suppoted Log Pages)		×
	page X '30' (Statistics Log Pages) [VU]*1		×

*1 FUJITSU unique function

Table 2.4 SCSI function specfications (7 of 7)

×: Supported
–: Not supported

Item			Specification
Command (group 5)	MODE SELECT	X’55’	–
	MODE SENSE	X’5A’	–
	READ	X’A8’	–
	WRITE	X’AA’	–
	WRITE AND VERIFY	X’AE’	–
	VERIFY	X’AF’	–
	SEARCH DATA HIGH	X’B0’	–
	SEARCH DATA EQUAL	X’B1’	–
	SEARCH DATA LOW	X’B2’	–
	SET LIMITS	X’B3’	–
	READ DEFECT DATA	X’B7’	–
	Command link function		×
	Relative block addressing function		×
	Command stack function		–
	Read-ahead cache feature		×
	Write cache feature		×
	Cache control feature		×

2.3 Optical Disk Cartridge Specifications

2.3.1 Recommended optical disk cartridgespecifications

Table 2.5 shows the specifications of the optical disk cartridge recommended for this optical disk drive. The use of another disk cartridge may lower drive performance.

Table 2.5 Recommended optical disk cartridge specifications

Model	Order number
Optical disk cartridge (128 MB)	CA90002-C010
Optical disk cartridge (230 MB)	CA90002-C011
Optical disk cartridge (540 MB)	CA90002-C012
Optical disk cartridge (640 MB)	CA90002-C013
Overwrite optical disk cartridge (230 MB)	CA90002-C041
Overwrite optical disk cartridge (540 MB)	CA90002-C042
Overwrite optical disk cartridge (640 MB)	CA90002-C043

2.3.2 Optical disk cartridge

Figure 2.1 shows an optical disk cartridge. The figure below shows the cartridge with its shutter open.

- Shutter closed

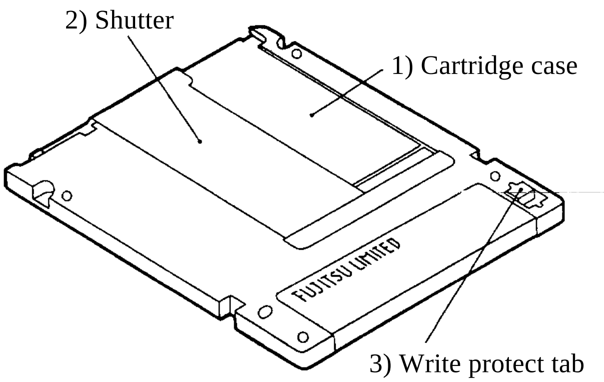

- Shutter open

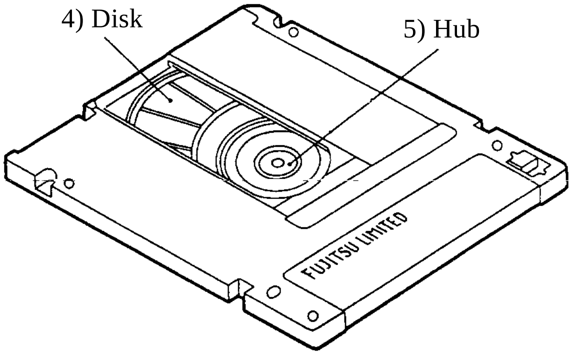

Figure 2.1 Optical disk cartridge

The following explains the components of the optical disk drive shown in Figure 2.1:

1) Cartridge case

   Covers the disk to protect it from damage when handled and facilitates disk replacement. The cartridge case is labeled and has a write protect tab.

2) Shutter

   Protects the disk against dust. When the cartridge is inserted into the optical disk drive, the shutter (metallic door) is opened.

3) Write protect tab

   The write protect tab selects whether write is enabled or disabled.

4) Disk

   Holds information which can be read by an optical beam.

5) Hub

   The hub is placed at the center of the disk and is linked to the spindle of the drive. The hub is used for radial centering and axial positioning.

2.3.3 Disk specifications

(1) 128 MB disk

The ISO/IEC10090 defines 128 MB disk specification.

(2) 230 MB disk

The ISO/IEC13963 defines 230 MB disk specification.

(3) 540 MB/640 MB disk

The ISO/IEC15041 defines 540 MB/640 MB disk specification.

Table 2.6 lists disk specifications.

Table 2.6 Disk specifications (1 of 2)

Item		Specification			
Disk media		128 MB	230 MB	540 MB	640 MB
Format	User zone (radius)	24 to 40 mm		23.72 to 40.99 mm	23.72 to 41.00 mm
	Track shape	Spiral			
	Track pitch	1.6±0.1µm	1.39±0.08 µm	1.10±0.05 µm	
	Direction of rotation	Counterclockwise (viewed from lens)			
	Number of zones	–	10	18	11
	Number of logical tracks/side	–	17,940	42,042	18,480
	Number of logical tracks/zone	–	1,380 to 2,208	1,750 to 2,772	1,260 to 2,100
	Number of physical tracks/side	–	11,500	15,700	15,708
	Number of physical tracks/zone	–	1,150	875 (825)	1,428
	Number of user tracks/side	10,000	17,940	42,042	18,480
	Number of sectors/track	25			17
	Data block length	512 bytes			2,048 bytes
Mechanical characteristics	Outer diameter of disk medium	86 mm			
	Outer diameter of hub	15 mm			
	Optical disk cartridge dimensions (W/L/H)	90/94/6 mm			

Table 2.6 Disk specifications (2 of 2)

Item			Specification			
Mechanical characteristics	Disk weight, without cartridge case		12 g or less			
	Cartridge case weight, without disk		50 g or less			
	Wrap and swing (1,800 rpm)	Radial	50 µ m, p-p or less		–	
		Axial	±0.22 mm		–	
	Acceleration (1,800 rpm)	Radial	3 m/s^2 or less		–	
		Axial	10 m/s^2 or less		–	
	Wrap and swing (3,000 rpm)	Radial	–		50 µm, p-p or less	
		Axial	–		±0.15 mm	
	Acceleration (3,000 rpm)	Radial	–		6.1 m/s^2 or less	
		Axial	–		22 m/s^2 or less	
	Tilt		5m rad or less			
Top capacity	Unformatted/side		181 MB	325 MB	819 MB	818 MB
	Formatted/side		128 MB	230 MB	538 MB	643 MB
	Usable side		One side usable			
Standard			ISO/IEC 10090	ISO/IEC 13963	ISO/IEC 15041	
Reliability	Read cycle		$>10^8$			
	Erase/write/read cycle		$>10^6$			
	Load/unload cycle		2,5000			
	Archival life (according to acceleration test results)		>10 years (*1)			
	Shelf life (according to acceleration test results)		>10 years (*2)			
Environmental requirements	Operating temperature		5 to 55°C			
	Operating relative humidity		3 to 85%RH (*3)			
	Storage temperature		–20 to 55°C			
	Storage humidity		3 to 90% RH (*3)			

*1 Archival life is the period in which recorded information can be read.
*2 Shelf life is the period in which information to be recorded can be written
*3 Maximum wet bulb temperature = 29°C

Note:

Non-recommended disks must be checked for compatibility.

2.4 Defect Management

2.4.1 Defect management schematic diagram

Defective sectors on the disk shall be replaced by good sectors according to the defect management scheme as follows: Defective sectors found during surface certification are handled by a sector slipping algorithm. Defective sectors found after initialization are handled by a linear replacement algorithm.

Figure 2.2 shows the algorithms for alternate processing.

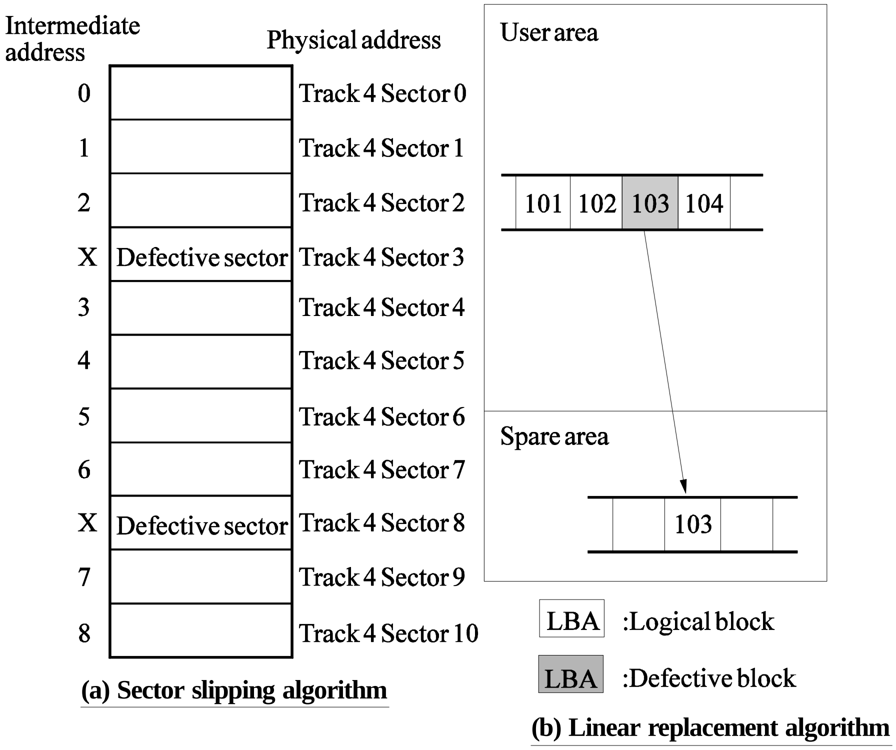

Figure 2.2 Algorithms for alternate processing

The user area is divided into several groups during media initialization. Each group contains data sectors and spare sectors. Spare sectors are used as replacements for defective data sectors. Media initialization can include a certification of the user area.

Figure 2.3 shows an example of alternate processing.

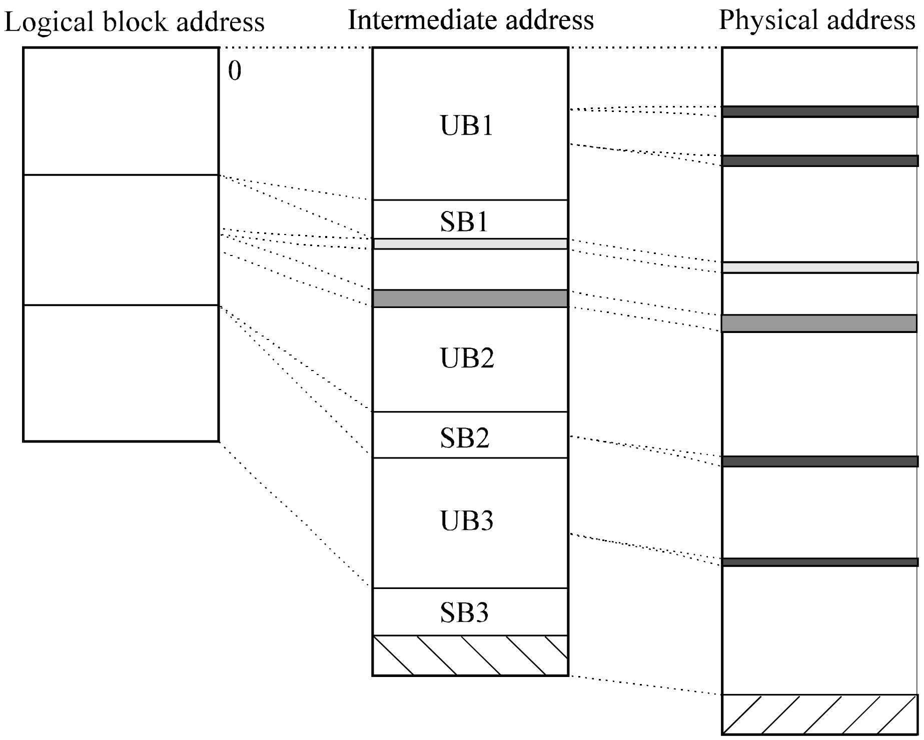

SB: Spare band
UB: User band

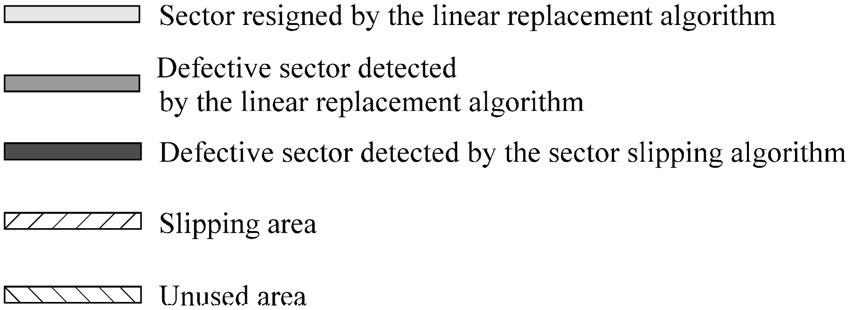

Figure 2.3 Example of alternate processing

This page is intentionally left blank.

CHAPTER 3 INSTALLATION REQUIREMENTS

3.1 Environmental Requirements
3.2 Mounting Requirements
3.3 Power supply Requirements
3.4 Connection Requirement

This chapter describes environmental, mounting, power supply, and connection requirements.

3.1 Environmental Requirements

The environment in which these drives are installed must comply with the ambient environmental requirements defined in Subsection 2.1.3.

3.1.1 Temperature measurement point

When a drive is operating, the ambient temperature measured 3 cm from the base surface of the optical disk drive and the PCA unit surface must satisfy the environmental requirements specified in Subsection 2.1.3. For the temperature of each surface during operation, the contact temperature at each measurement point shown in Figure 3.1 must satisfy the requirements specified in Subsection 3.1.2.

CAUTION

Low temperature burns:
The surface temperatures of some ICs on the printed circuit board unit in the optical disk drive exceed 55°C while operating. Be careful of low tenperature burns.

(a) Inside optical disk cartridge

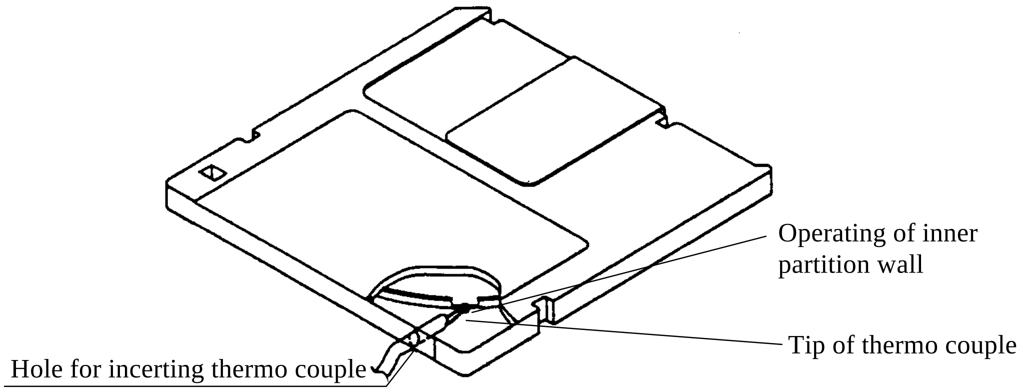

(b) IC (controller, read map)

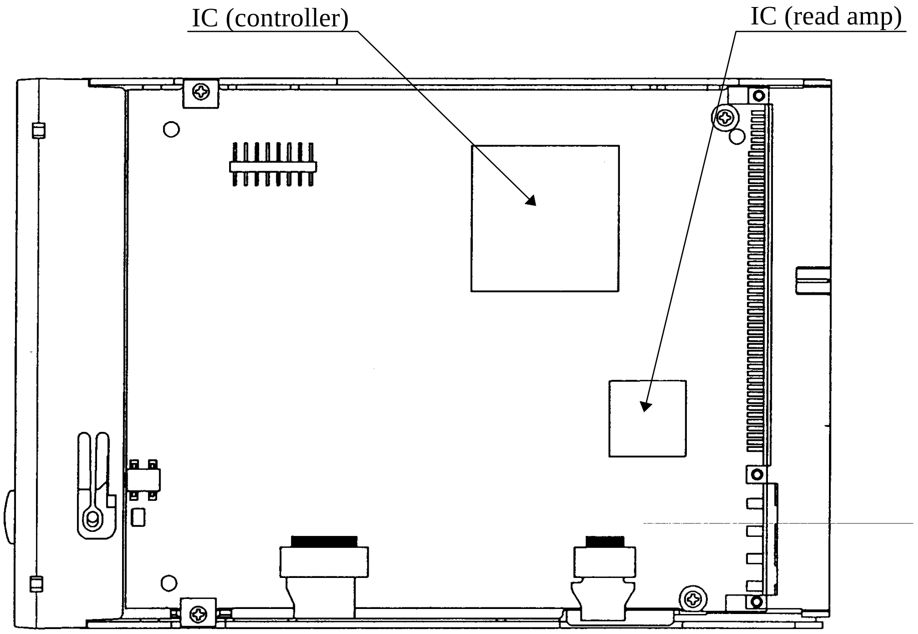

Figure 3.1 Surface temperature measurement points

3.1.2 Temperature requirementsand measuring method

Table 3.1 shows the temperature requirement at each measurement point shown in Figure 3.1.

Table 3.1 Temperature requirements at measurement points

Measurement point	Maximum surface temperature
Cartridge inside	55°C (*)
IC (controller) surface	75 °C
IC (read amp.) surface	85 °C

Note: * 60°C for the optical disk cartridge manufactured by Fujitsu.

Following procedure is for temperature measurement of inside cartridge.

1) Make a hole for the thermo couple as shown in Figure 3.1.

2) Disassemble the cartridge disk.

3) Cut off a part of the partition wall for the optical media as shown in Figure 3.1. (Cut off width: 5 to 10 mm)

4) Fix the tip of the thermo couple to the cut portion of partition wall with an adhesive agent.

5) Pass the thermo couple through the hole at the cartridge case and assemble the cartridge disk. When there is a gap between the hole and the thermo couple, fill the gap with the adhesive agent.

Note:

1. If the external environment temperature is higher than the specified value, the device will automatically take an interval to respond to command, and then take protective action to respond to the temperature increase.

2. If the ambient temperature becomes higher than the measured temperature, the device automatically operates to protect itself from rising temperatures.

3.1.3 Air flow

It is recommended that this optical disk drive be installed in a fanless cabinet. However, if the power supply is incorporated into the same cabinet, it is recommended that it satisfy the “Temperature Conditions” in 3.1.2 and that the air flow rate being drawn in by the device) at the cartridge loading slot be 0.02 m^3/min, 0.3 m/s or lower. Furthermore, if there is a system fan in a system where this drive is being installed, the same conditions must be met.

3.1.4 Temperature rise under several conditions

Table 3.2 Temperature at each measuring point (Reference)

[Ambient atmospheric temperature of the optical disk drive: 45°C] (°C)

Measurement point	Ready	Random seek	Criteria
Inside cartridge	49°C	52°C	55°C
IC (controller) surface	50°C	61°C	75°C
IC (read amp.) surface	48°C	60°C	85°C
Thermal sensor	47°C	52°C	—

Notes:

1. The above data are data measured in a constant temperature chamber in which the temperature surrounding the equipment was kept at 45°C. They are not the same as the data obtained from measurements using the exclusive box in which the equipment is normally used.

2. When using the box, the ambient temperature around the equipment will differ depending on the air circulation conditions of the box, and the temperature rise inside the cartridge will differ because of this, so please exercise caution.

3.1.5 Air purity

The cleanness of the environment where this device is installed is expressed as the number of dust particles, and it is recommended that it be used in an environment with a Class 5 million or lower dust count. (Class 5 Million: There should be 5 million or fewer dust particles measuring 0.5 µm or larger in one cubic foot of air space. Using the gravimetric method, this corresponds to 0.15 mg/m^3.)

3.2 Mounting Requirements

3.2.1 External dimensions

Figures 3.2 to 3.3 show the dimensions of the drive and the positions of the mounting holes.

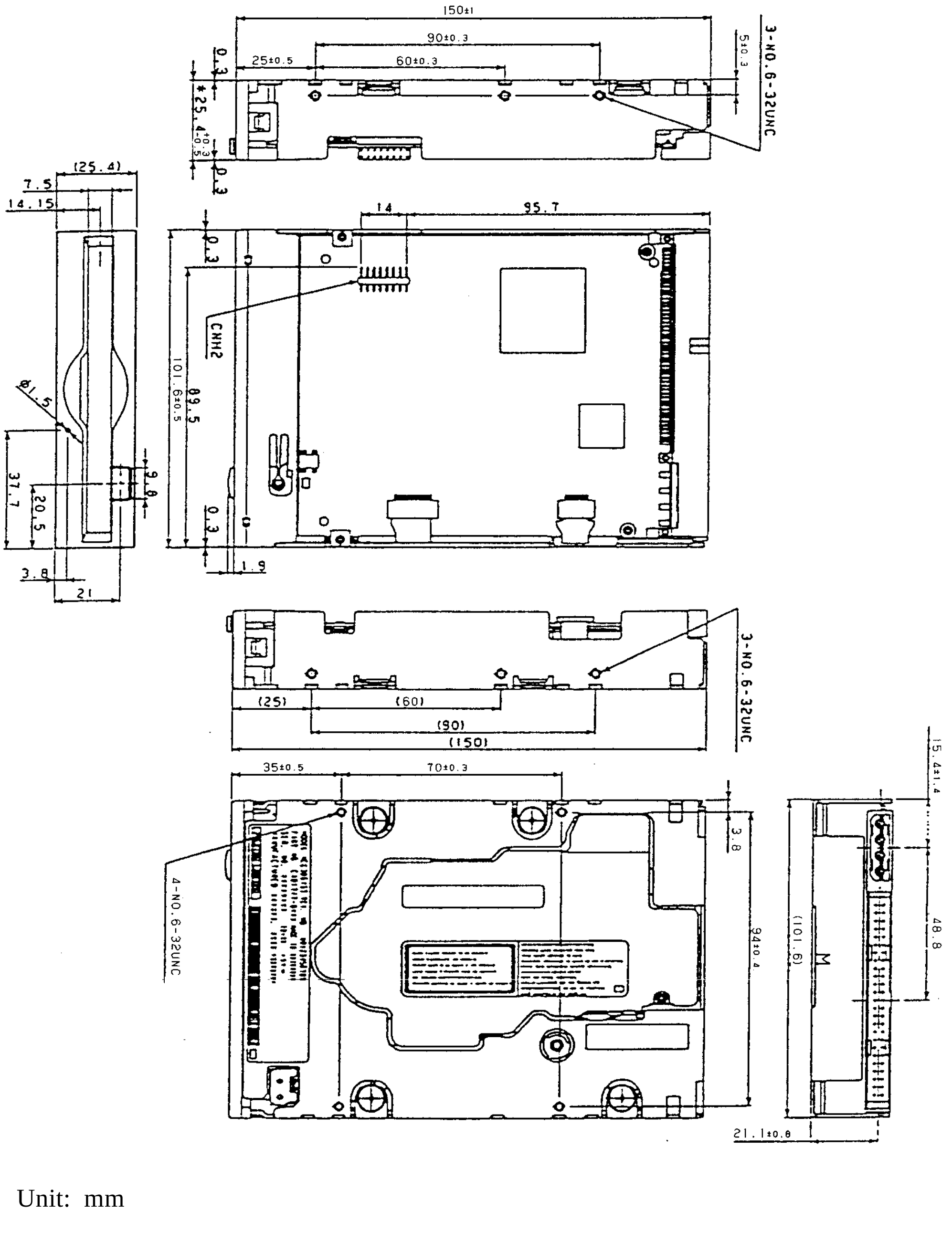

Unit: mm

Note: The height length is 25.4 ± 0.8 besides the panel size.

Figure 3.2 Dimensions

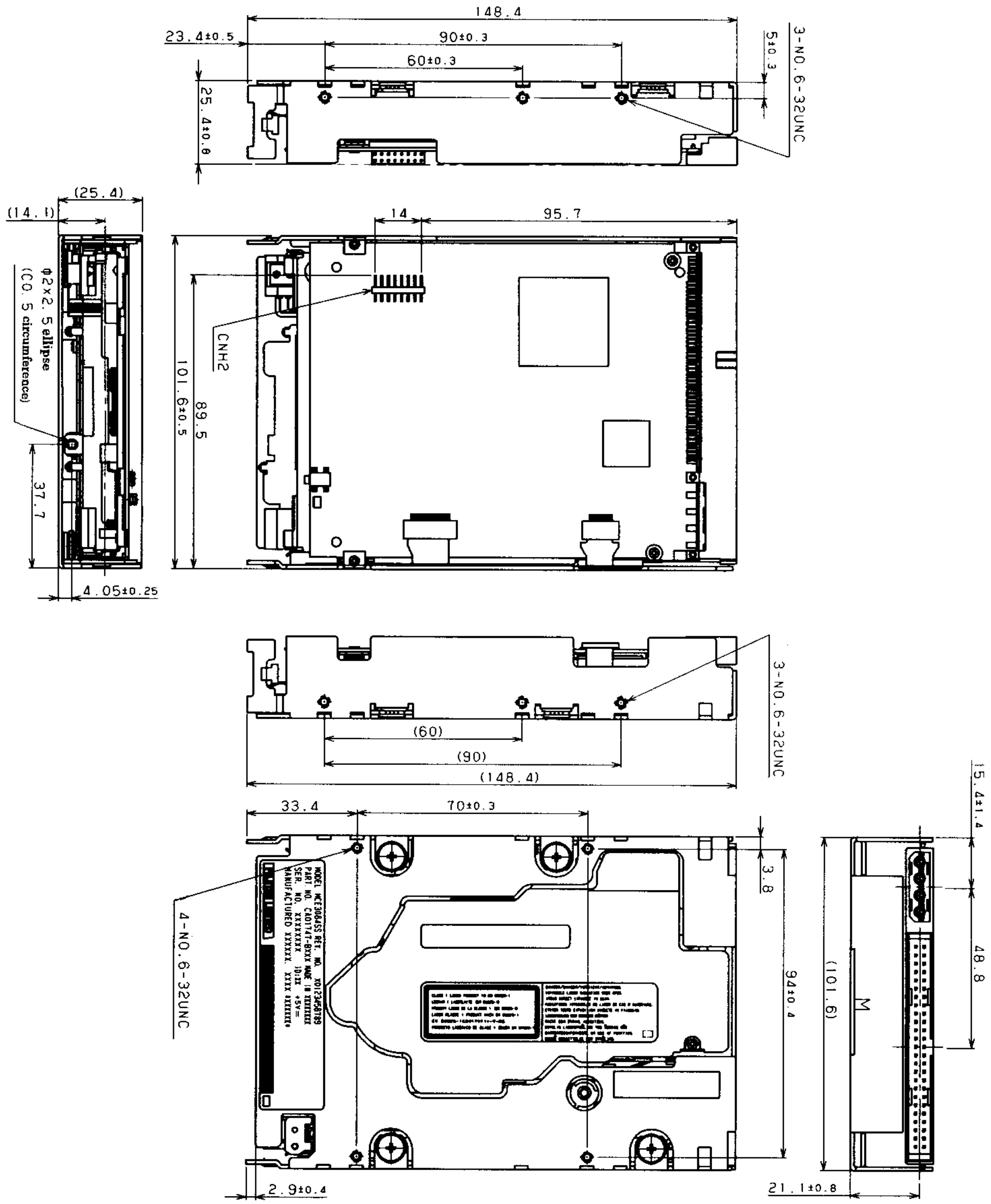

Unit: mm

Note: Those enclosed in parentheses are inch screws.

Figure 3.3 Dimensions (without panel)

3.2.2 Installation direction

Figure 3.4 shows the permissable installation directions for this drive. The mounting angle tolerance must be within –5° to 10° from the horizontal. (–) shows that the insertion faces below.

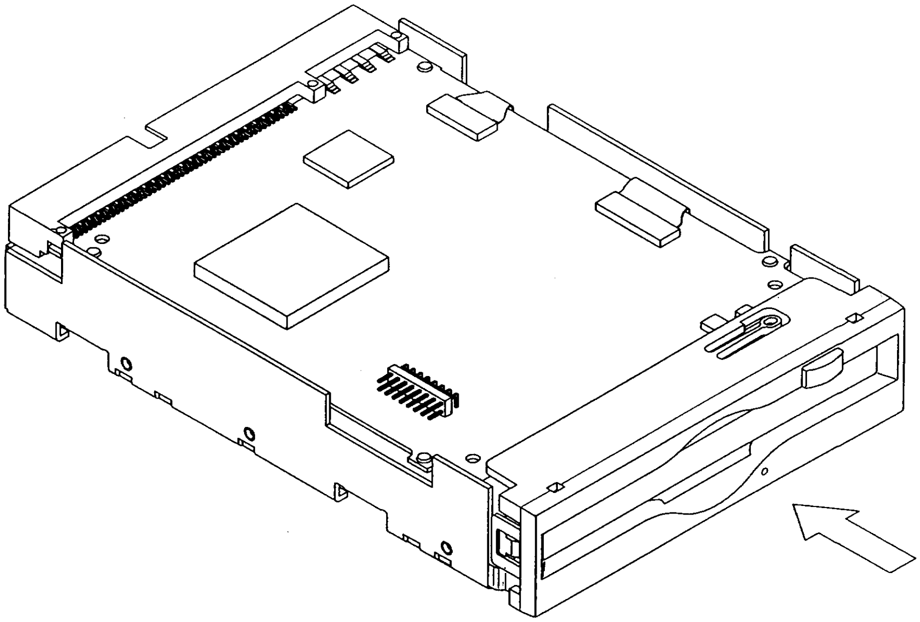

- Horizontal

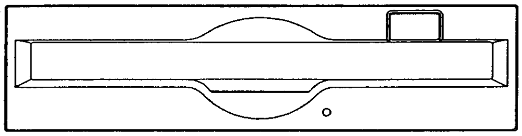

- Vertical
  (Two orientations)

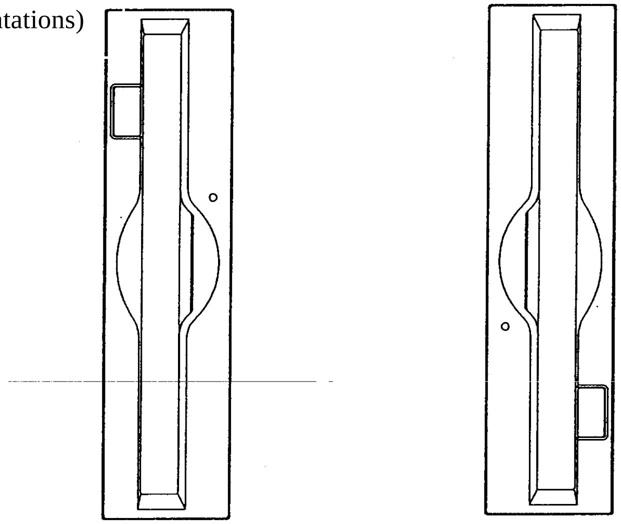

Figure 3.4 Installation directions

3.2.3 Centers of gravity

Figure 3.5 shows the centers of gravity of the drive.

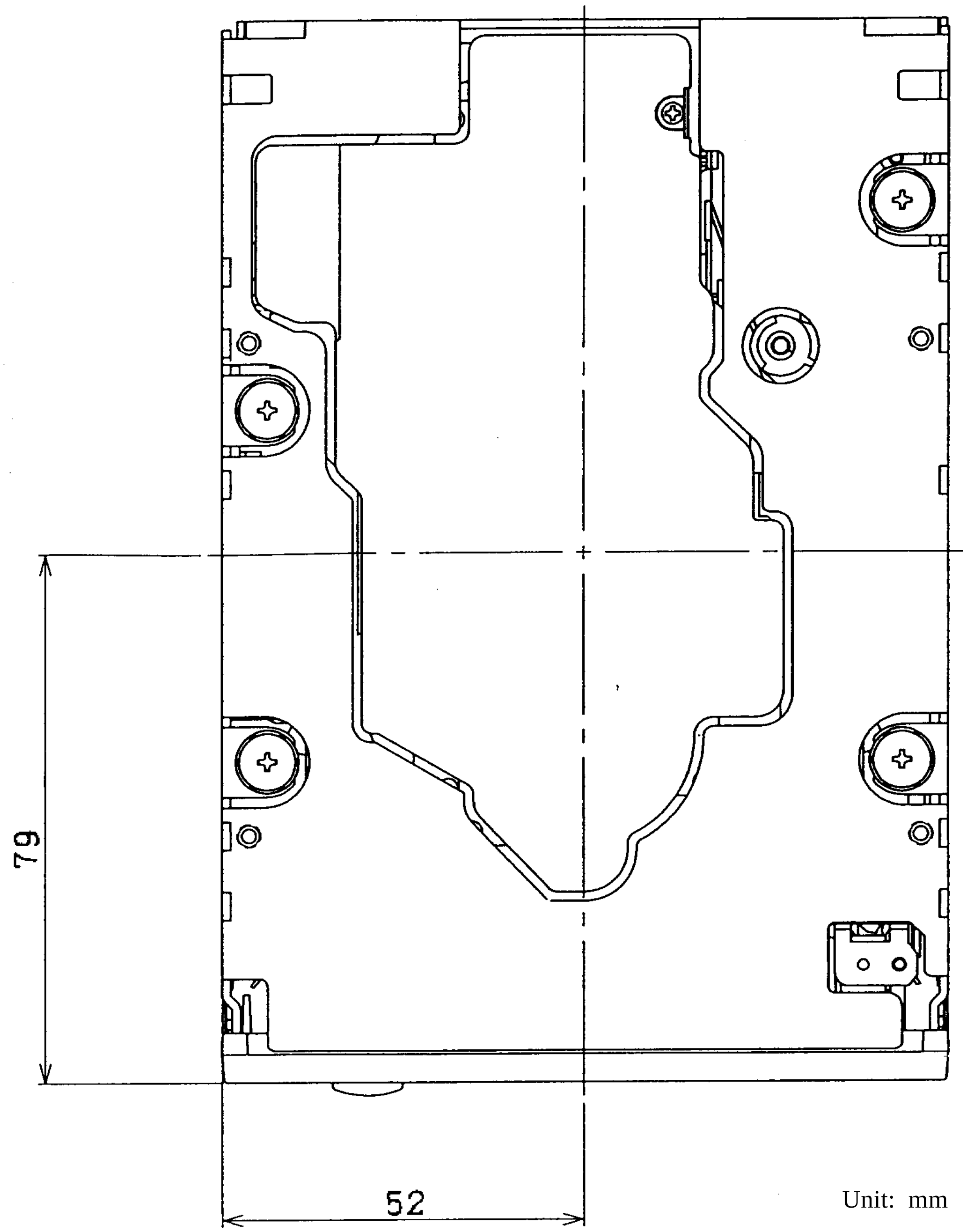

Figure 3.5 Centers of gravity

3.2.4 Notes on mounting

(1) Mounting frame structure and clearance

a) For vibration resistance and heat dissipation, this optical disk drive uses an embossed structure as shown in Figure 3.6, as well as a frame which has a construction similar to other frames which perform the same function.
b) As shown in Figure 3.6, the inward projection of the mounting screw from the outer surface of the drive frame must not exceed 3 mm.
c) The clearance between the external surface of the drive frame and the user's frame structure must be at least 1.5 mm.
d) The clearance between the top and bottom surfaces and the user's frame structure must be at least 1.5 mm.
e) When mounting the optical disk drive, the screw tightening torque should be 0.4 to 0.45Nm (4 to 4.6kgcm).
f) When the optical disk drive (with panel) is mounted in a locker, there should be no deformation of the mounting fittings provided and the optical disk drive's panel should not be deformed. If the drive is used with the panel deformed, ejection of the cartridge will be faulty. Check if the door will close from any position whatever when the optical disk drive is installed.

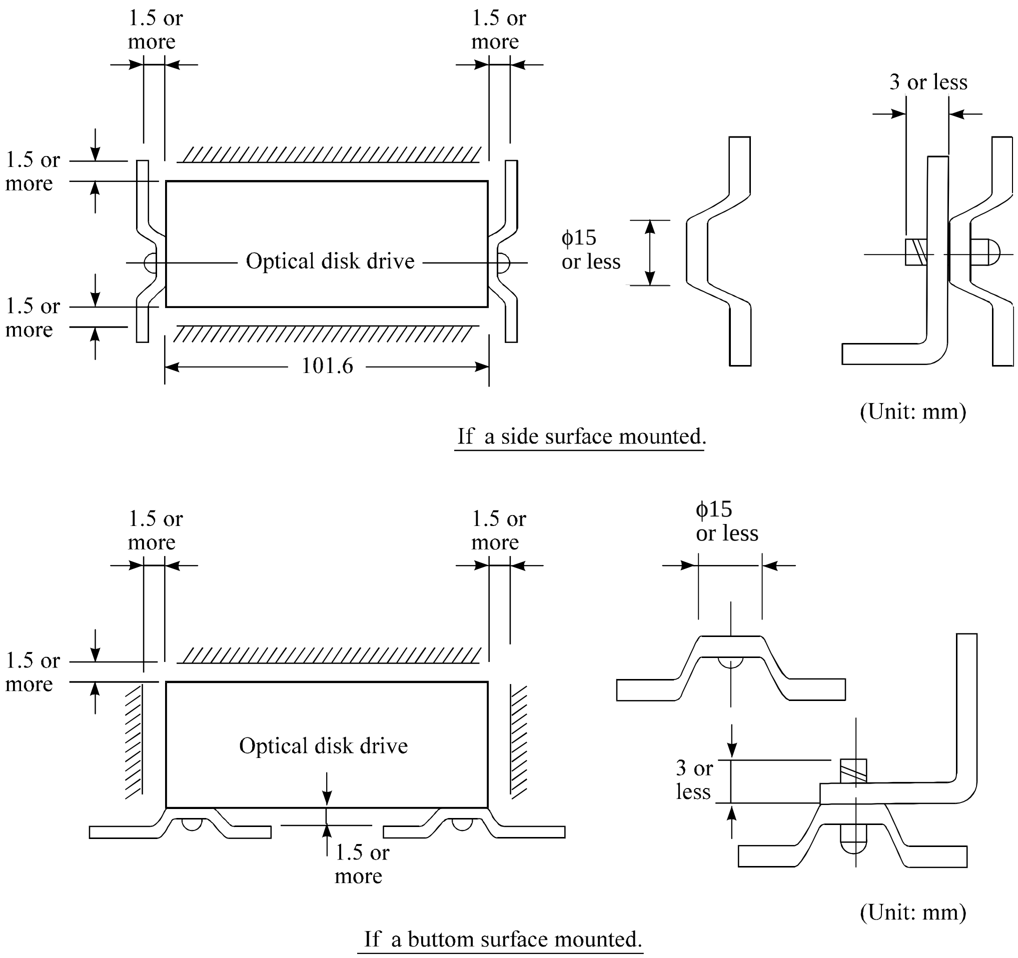

Figure 3.6 Mounting frame structure

(2) Service clearance

Figure 3.7 shows locations which must be accessed for installation and maintenance. Be sure to leave sufficient service clearance.

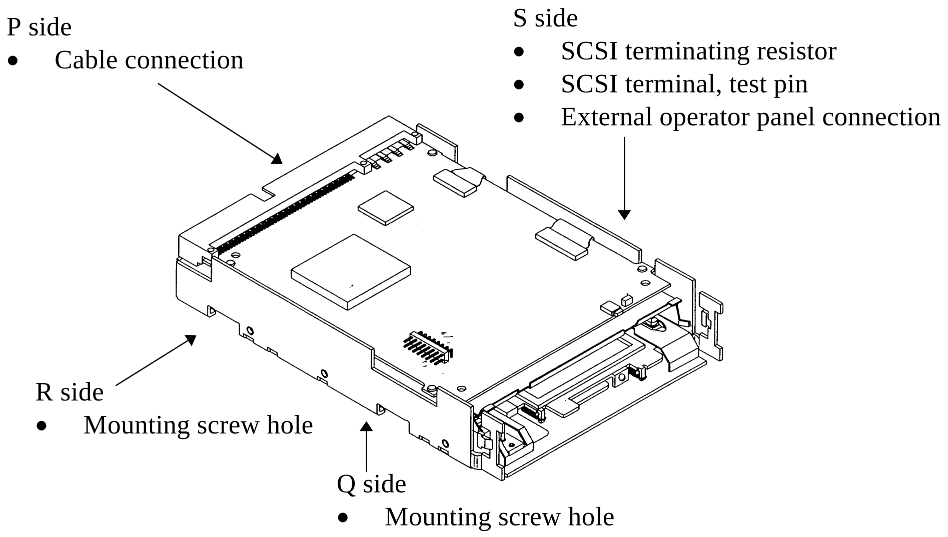

Figure 3.7 Service clearance

(3) External magnetic fields

Mount the optical disk drive away from powerful magnetic materials (e.g., a speaker) to avoid influence from the front side of magnetic fields.

(4) Leak magnetic field

The VCM drive magnetic circuit may leak the magnetic field (Maximum 25 Gauss at distance of 4 mm from the drive).

IMPORTANT

Do not place a device sensitive to a magnetic field near the optical disk drive.

(5) External light source

Mount the optical disk drive away from strong light sources (e.g., camera flash).

(6) System ground

The optical disk drive should be grounded to the signal ground (SG) of the power supply of the system. This SG line should be supplied with the system.

The Frame Ground is shorted in the optical disk drive by a metal strip attached to the vibration isolation rubber between the frame (FG) and the base (SG).

3.3 Power Supply Requirements

(1) Allowable input voltage and current

The DC power supply input voltage measured at the power supply connector pin of the optical disk drive (receiving end) must satisfy the requirements in Section 2.1.3. (For other requirements, see items (4) and (5) below.)

(2) Current waveform (reference)

Figure 3.8 shows the +5 VDC waveform at start of spindle motor rotation.

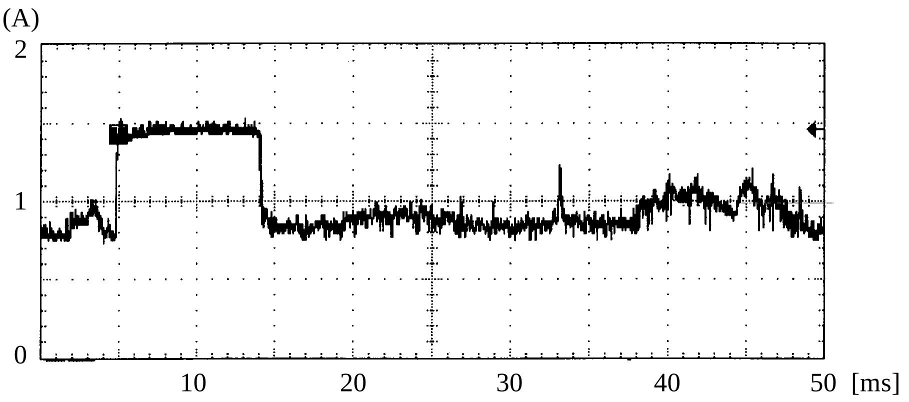

Figure 3.8 Current waveform (+5 VDC)

(3) Power on/off sequence

a) In a system which uses the terminating resistor power supply signal (TERMPWR) of the SCSI bus, the requirements for +5 VDC given in Figure 3.9 must be satisfied between the drive and at least one of the SCSI devices supplying power to that signal.

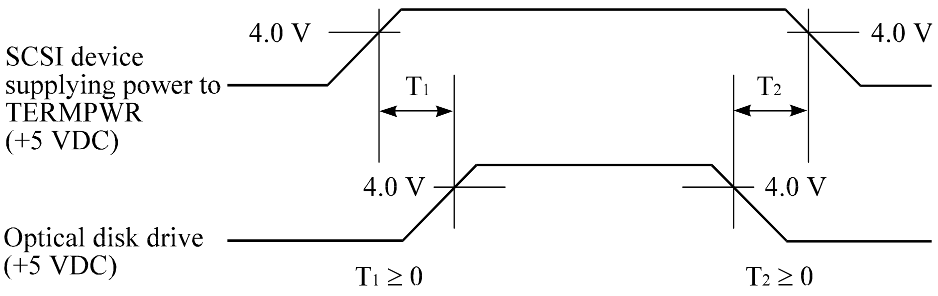

Figure 3.9 Power on/off sequence (1)

b) In a system which does not use the terminating resistor power supply signal (TERMPWR) of the SCSI bus, the requirements for +5 VDC given in Figure 3.10 must be satisfied between the drive and the SCSI device with the terminating resistor circuit.

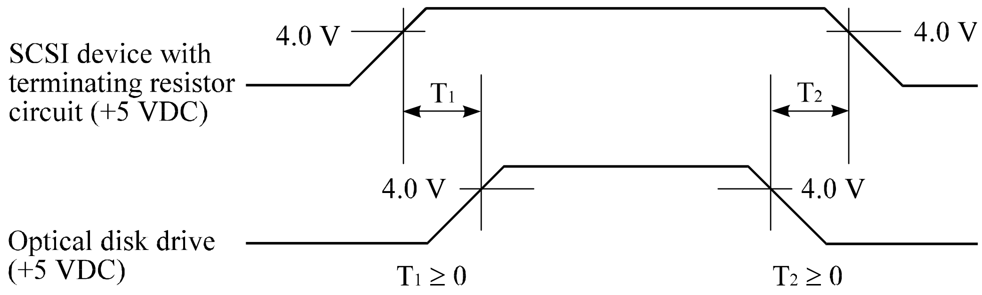

Figure 3.10 Power on/off sequence (2)

c) Between the drive and other SCSI devices on the SCSI bus, the +5 VDC power on/off sequence is as follows:

- In a system with all its SCSI devices designed to prevent noise leakage to the SCSI bus when the power is turned on or off, the power sequence does not matter if the requirement in (a) or (b) is satisfied.
- In a system containing an SCSI device which is not designed to prevent noise leakage to the SCSI bus, the requirement given in Figure 3.11 must be satisfied between the SCSI device and the drive.

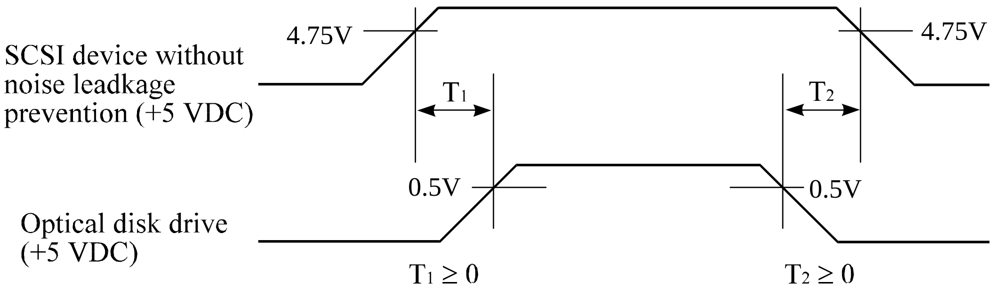

Figure 3.11 Power on/off sequence (3)

(4) Power supply to SCSI terminating resistor

If the power for the terminating resistor is supplied from the drive to other SCSI devices through the SCSI bus, the current-carrying capacity of the +5 VDC power supply line to the optical disk drive must be designed with consideration of an increase of up to 900 mA.

Select a method of power supply to the drive in accordance with the setting terminal of the optical disk drive. See Subsection 4.3.3.

(5) Noise filter

To eliminate AC line noise, a noise filter should be installed at the AC input terminal on the power supply unit of the drive. The noise filter specifications are as follows:

- Attenuation: 40 dB or more at 10 MHz
- Circuit configuration: The T-configuration shown in Figure 3.12.

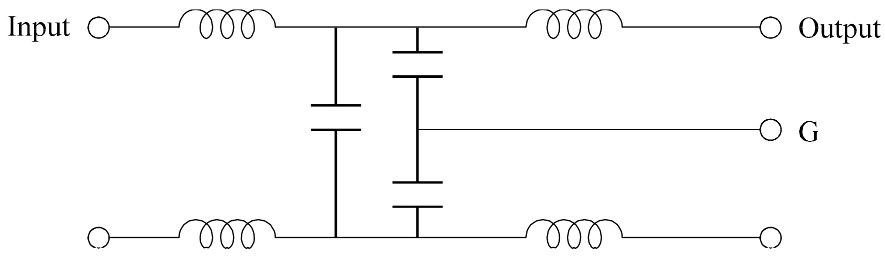

Figure 3.12 AC noise filter (recommended)

3.4 Connection Requirement

3.4.1 Connectors and terminals

This drive is equipped with the connectors and terminals shown below for external connection. Figure 3.13 shows their locations.

- Power supply connector
- SCSI connector
- External operator panel terminal (CNH2)

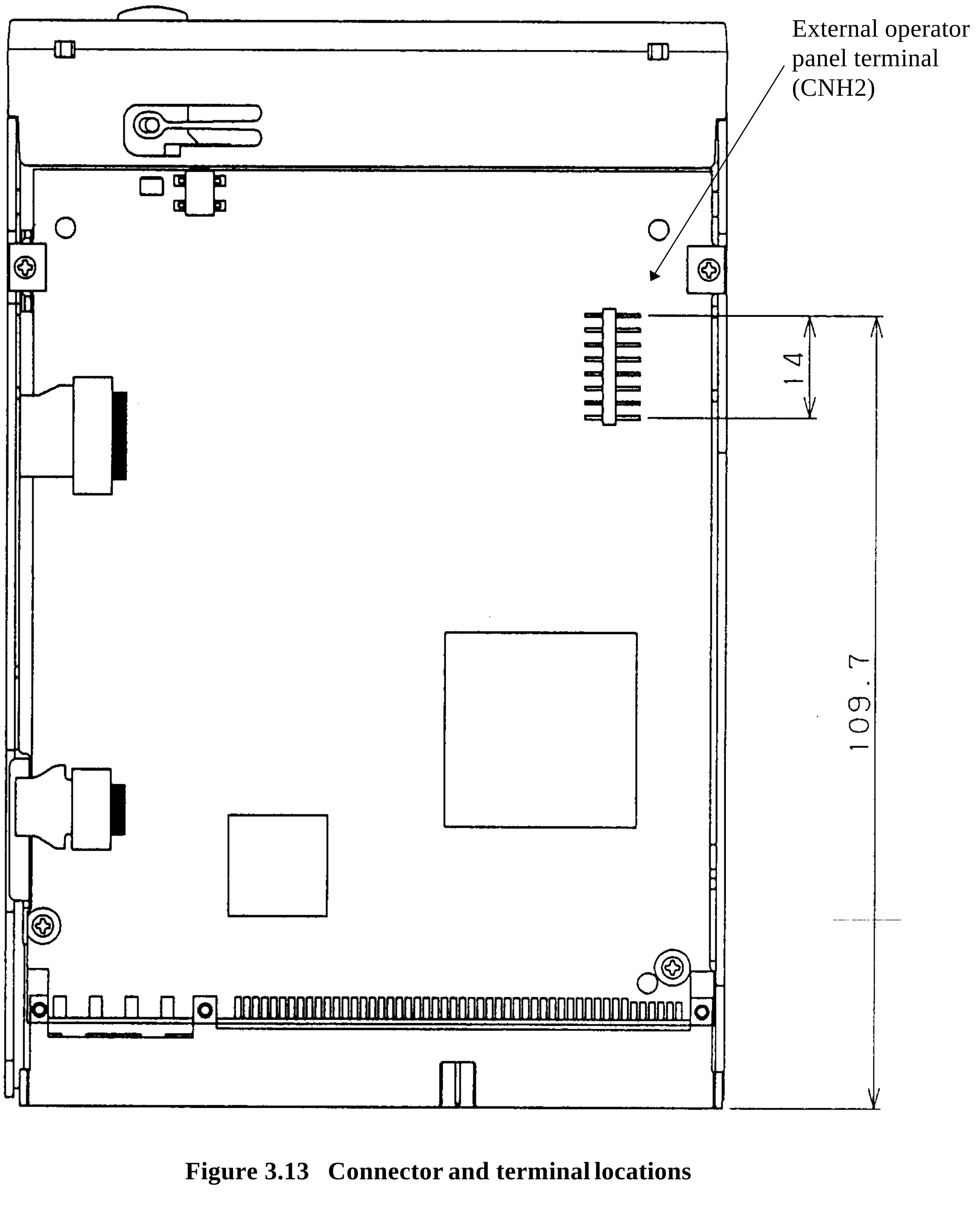

Figure 3.13 Connector and terminal locations

(1) Power supply connector

Figure 3.14 shows the shape and pin assignment of the DC power supply input connector.

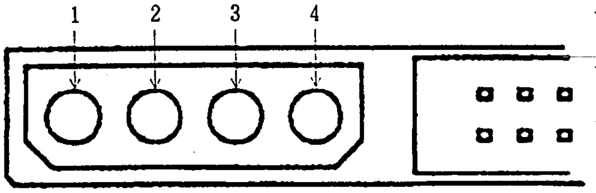

1	+12 VDC or N.C.
2	+12 VDC RETURN (GND) or N.C.
3	+5 VDC RETURN (GND)
4	+5 VDC

Figure 3.14 Power supply connector

(2) SCSI connector

The connector for the SCSI bus is an unshielded standard connector with two rows of 25 pins on 2.54 mm (0.1 inch) centers. Figure 3.15 shows the SCSI interface connector. Table 3.3 shows the signal assignment of the SCSI bus connector.

See Chapter 7 for details on the electrical requirements of the interface signals.

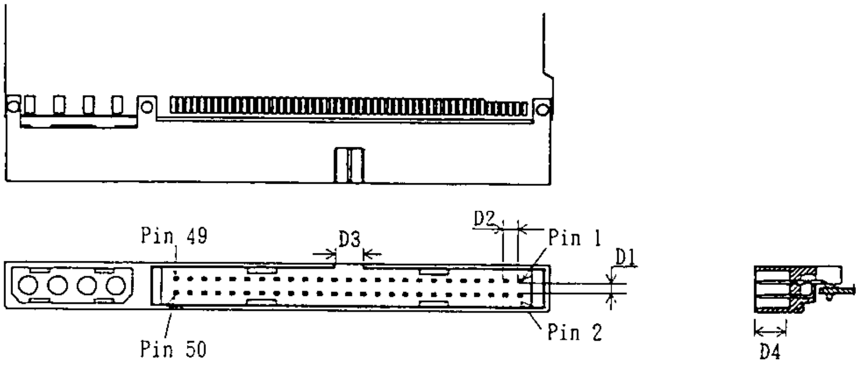

Symbol	mm	Inch	Remark
D1	2.54	0.10	————
D2	2.54	0.10	————
D3	5.08	0.20	————
D4	6.25	0.246	————

Note:

Tolerance is ±0.127 mm (0.005 inch) unless otherwise specified.

Figure 3.15 SCSI interface connector (drive side)

Table 3.3 Signal assignment of SCSI connector

Pin number	Signal	Signal	Pin number
01	GND	–DB0	02
03	GND	–DB1	04
05	GND	–DB2	06
07	GND	–DB3	08
09	GND	–DB4	10
11	GND	–DB5	12
13	GND	–DB6	14
15	GND	–DB7	16
17	GND	–DBP	18
19	GND	GND	20
21	GND	GND	22
23	GND	GND	24
25	(Open)	TERMPWR (*1)	26
27	GND	GND	28
29	GND	GND	30
31	GND	–ATN	32
33	GND	GND	34
35	GND	–BSY	36
37	GND	–ACK	38
39	GND	–RST	40
41	GND	–MSG	42
43	GND	–SEL	44
45	GND	–C/D	46
47	GND	–REQ	48
49	GND	–I/O	50

*1 Terminating resistor power supply (jumper selectable: input only, both input and output, or open)

IMPORTANT

For cables using pin 01 as shield ground, note that the shield of the connector on the drive is not connected to ground.

3.4.2 Cable connection requirements

Figure 3.16 shows the cable connection mode between the drive, host system, and power supply unit. Table 3.4 lists recommended components for the connection.

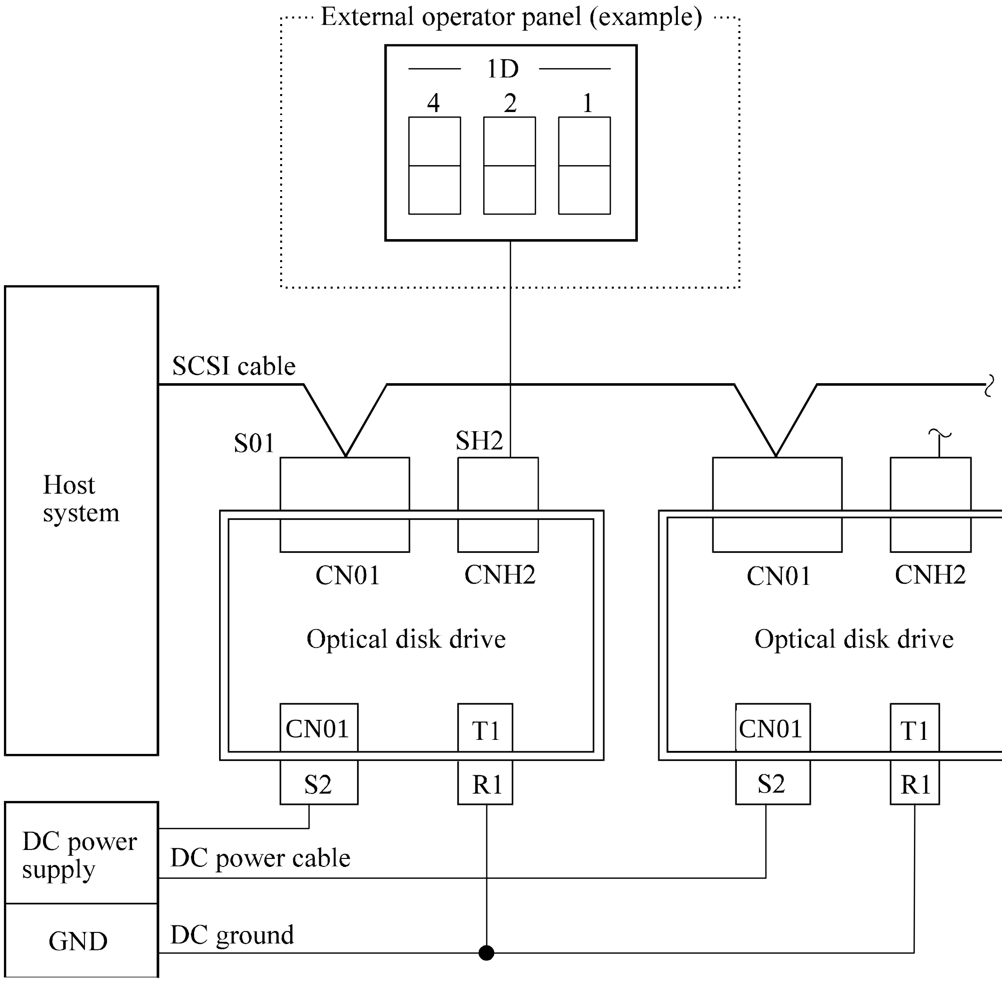

Figure 3.16 Cable connection mode

Table 3.4 Recommended components for connection

Category	Name	Model	Manufacturer	Symbol in Figure 3.19
SCSI cable	Cable socket (closed-end type)	FCN-707B050-AU/B	Fujitsu Ltd.	S01
	Cable socket (through-end type)	FCN-707B050-AU/O	Fujitsu Ltd.	
	Signal cable	UL20184-LT25PX28AWG	Hitachi Cable, Ltd.	—
		455-248-50	SPECTRA-STRIP	
Power supply cable	Housing for cable socket	1-480424-0	AMP	S2
	Contact	170121-4	AMP	
	Cable	AWG18	—	—
External operator panel	Housing for cable socket	LPC-16F02	Honda-Tsushin	SH2
	Receptacle	LPC-F104N	Honda-Tsushin	
	Cable	AWG28	—	—

(1) SCSI cable

All SCSI devices on one bus are daisy-chained with an SCSI cable. A terminating resistor must be mounted in the SCSI device at each end of the SCSI cable.

A terminating resistor is mounted on the drive when the drive is shipped. A terminating resistor must be disconnected when the drive is not connected to an end of the SCSI cable. Select a method of power supply to the terminating resistor circuit according to the setting pins on the drive. See Section 4.3 for details.

Up to eight SCSI devices can be connected to the SCSI bus. SCSI devices include the host adapter, the optical disk drive, and other SCSI equipment.

The connector (socket) for the SCSI cable must be an unshielded 50-contact socket with two rows of 25 contacts on 2.54 mm (0.1 inch) centers. The connector should also be polarized or keyed to prevent misinsertion. (See Figure 3.17.)

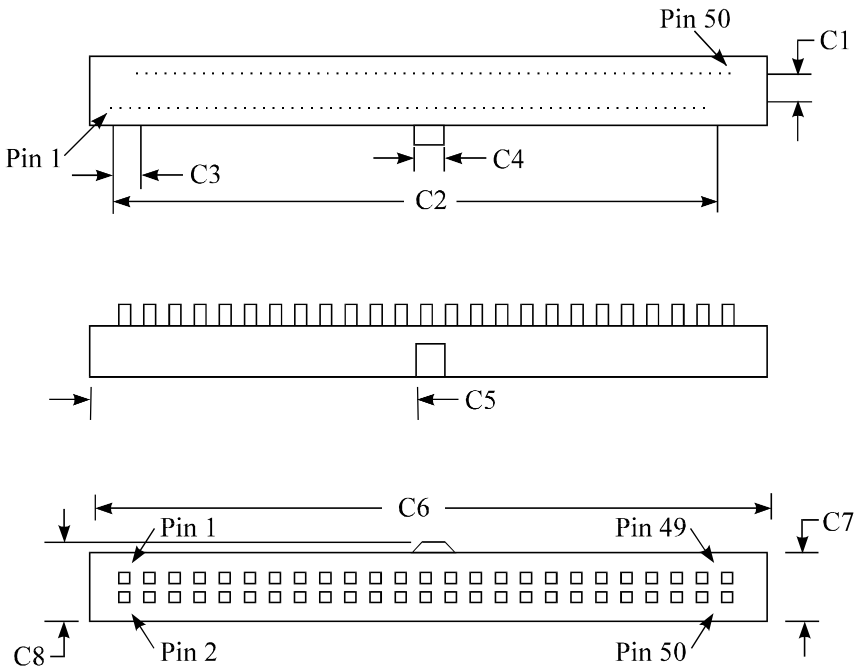

Symbol	mm	Inch	Remark
C1	2.540	0.100	——
C2	60.960	2.400	——
C3	2.540	0.100	——
C4	3.302	0.130	——
C5	32.385	1.275	——
C6	68.072	2.680	——
C7	6.096	0.240	——
C8	7.620	0.300	Max.

Note:

Tolerance is ±0.127 mm (0.005 inch) unless otherwise specified.

Figure 3.17 SCSI cable connector

The maximum length of the SCSI cable is as follows. If more than one SCSI device is connected, the total length must not exceed 6 m.

A 25-pair twisted-pair cable satisfying the following requirements is recommended for the SCSI cable:

Table 3.5 SCSI cable requirements

Item	Single-Ended type
Conductor size	28 AWG or larger
Characteristic impedance	100 to 132 Ω

Each pair of wires must be connected to pins n and n + 1 (where n is an odd number) on the interface connector. All cables used on the same SCSI must have the same characteristic impedance to reduce signal reflection and to maintain transmission characteristics.

When an SCSI device is not connected to an end of the SCSI cable, connection to the SCSI connector must be at a branching point of the cable. If an SCSI device is connected to an end of the SCSI bus, any excess cable length after the last SCSI device must be terminated with a resistor. (See Figure 3.18.)

(a) Connection to a point along the cable

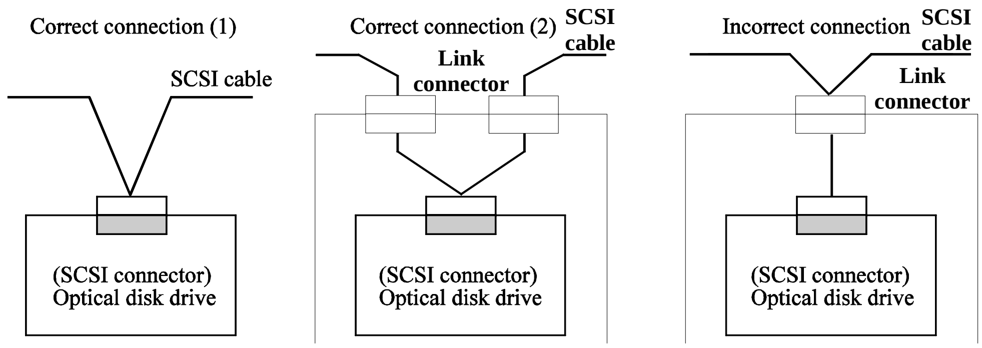

(b) Connection to a point along the cable

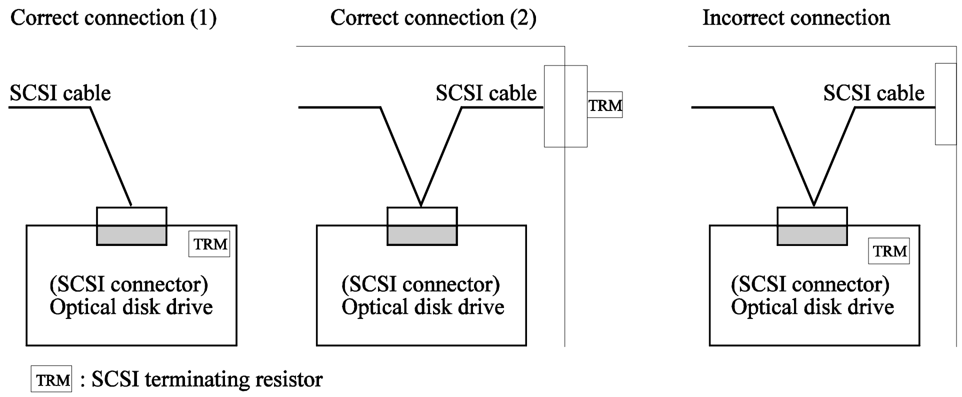

Figure 3.18 SCSI cable connection

(2) Power supply cable

The drive must be star-chain-connected to the DC power supply unit (one-to-one connection) to reduce the influence of load variations.

(3) DC ground

A DC ground cable may or may not be installed depending on the system requirements (system installation environment, cabinet structure, and power supply system). This cable is generally connected to the ground of the power supply unit. Connection between more than one optical disk drive may be in a daisy chain.

3.4.3 External operator panel

Some set switch settings can be manipulated through the external operator panel interface.

Figure 3.19 shows a recommended circuit for the external operator panel. Since an external operator panel is not provided as an option, the user must design one based on the system requirements and the recommended circuit.

IMPORTANT

Provide switches and LEDs (required for the system) on the external operator panel. See the recommended circuit shown in Figure 3.21.

A signal which is not set on the external operator panel connected to CNH2 must be set using SW1. The SW1, and CNH1 corresponding to the signal set on the external operator panel must be set to OFF position.

For details, see Subsection 4.3.1.

Figure 3.20 shows the external operator panel connector and Table 3.6 shows the specification of the external operator panel connector interface.

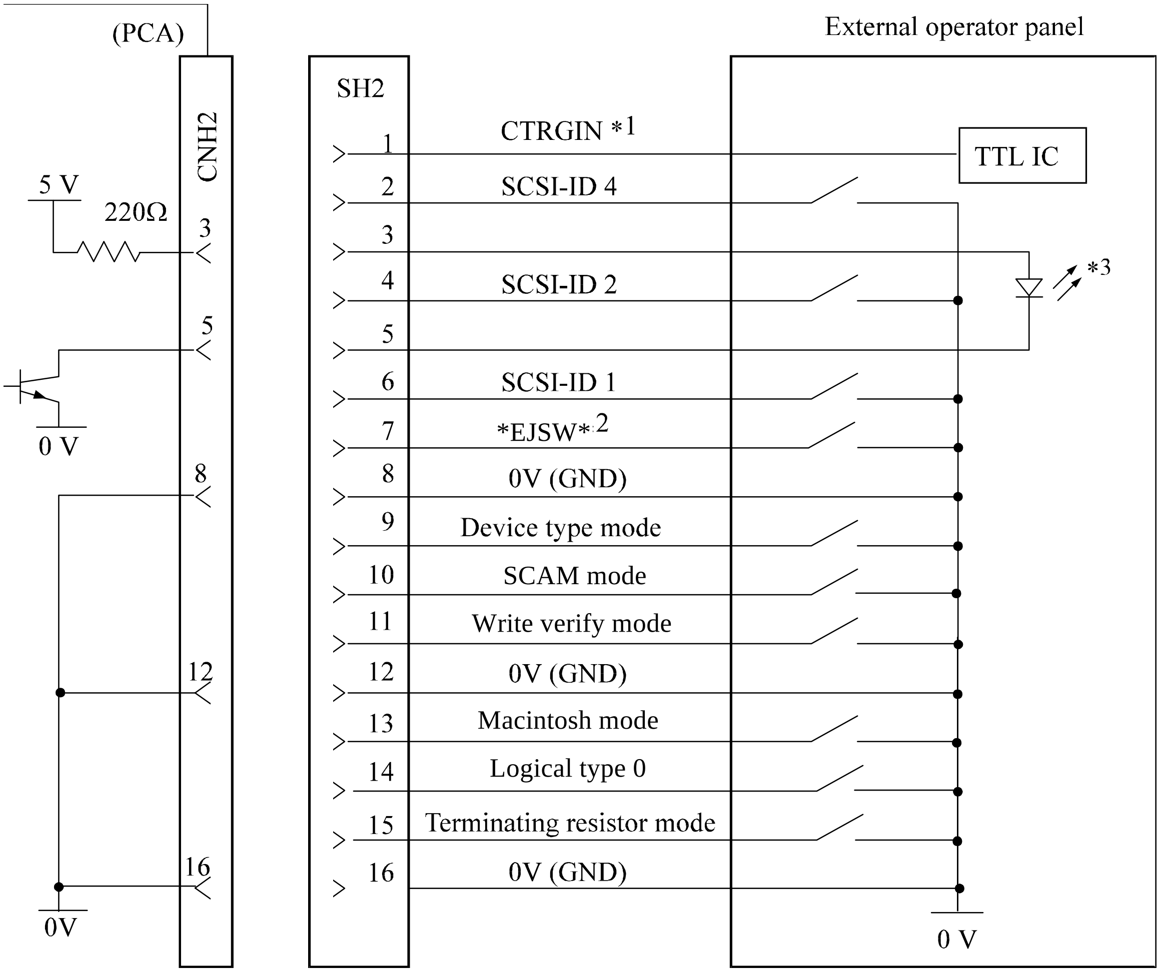

*1: This signal indicates that the cartridge is in the drive.
H: Exist L: None (TTL level signal)

*2: This signal is used for ejecting the cartridge from the host system

*3: For the LED, the following specification must be satisfied.
Format current: 20 mA or less

Note:

The cable length must not exceed 30 cm.

Figure 3.19 External operator panel circuit example

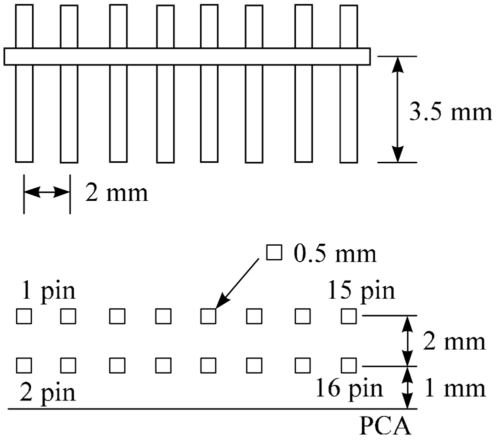

Figure 3.20 External operator panel interface connector

Table 3.6 External operator panel interface(1 of 2)

Signal	Pin	Reference setting signal	Function
SCSI-ID 4	2	SW1-01	Equivalent to ON position of SW1-01 by shorting with 0 V.
SCSI-ID 2	4	SW1-02	Equivalent to ON position of SW1-02 by shorting with 0 V.
SCSI-ID 1	6	SW1-03	Equivalent to ON position of SW1-03 by shorting with 0 V.
Device type mode	9	SW1-06	Equivalent to ON position of SW1-06 by shorting with 0 V. See 3.4.4 (1)
SCAM mode	10	–	See 3.4.4 (2)
Verify mode	11	–	See 3.4.4 (3)
Macintosh mode	13	–	See 3.4.4 (4)
SCSI type-0	14	–	See 3.4.4 (5)
SCSI terminating resistor mode	15	CNH1(5-6)	Equivalent to shorting CNH1 05-06 by shorting with 0 V.
+LED	3	–	LED+terminal for external connection
–LED	5	–	LED–terminal for external connection
*EJSW	7	–	External eject instruction input (TTL-IC level) L level: Equivalent to pushing eject switch H level: Equivalent to not pushing eject switch

Table 3.6 External operator panel interface (2 of 2)

Signal	Pin	Reference setting signal	Function
CTRGIN	1	–	External cartridge sensor output (TTL-IC level) L level: No cartridge in drive H level: Cartridge in drive
0 V (GND)	8, 12, 16	–	0 V

3.4.4 External operator panel settings (CNH2)

(1) Device type mode

Table 3.7 shows the device type settings which are returned when the INQUIRY command is issued to the optical disk drive.

Table 3.7 Device type mode setting

Device Type	CNH 2/Pin 9 - GND
X'07' (Optical memory device)	Open*
X'00' (Direct access device)	Shorted

* Setting when delivered

(2) SCAM mode

Table 3.8 shows the settings which determine whether to use SCAM mode.

Table 3.8 SCAM mode setting

SCAM mode	CNH 2/Pin 10 - GND
The optical disk drive uses SCAM mode.	Shorted
The optical disk drive does not use SCAM mode.	Open*

* : Setting when delivered

(3) Write verify mode

The default setting of the verify function is specified. When the verify mode is invalid, verification is not performed when the WRITE command is issued. With the verification invalid, the writing speed is increased by about 20% (depending on the situation). Table 3.9 shows the verify mode settings. The verification can also be specified as valid or invalid by the MODE SELECT command.

Table 3.9 Write verify mode setting

Write verify mode	CNH 2/Pin 11 - GND
Does not perform verification for the WRITE command (invalid)	Shorted
Performs verification for the WRITE command (valid).	Open*

* : Setting when delivered

NOTICE

Loss of data

When the verify function is invalid, the write data quality is not guaranteed. This mode should not be used for storing important data. When using the mode for storing important data, a preventive system measure such as file duplication is required.

(4) Macintosh mode

The SCSI operation of the optical disk drive is changed so as to be connectable to the Macintosh. Table 3.10 shows the Macintosh mode settings.

The mode should be off when connecting to other than the Macintosh.

Table 3.10 Macintosh mode setting

Macintosh mode	CNH 2/Pin 13 - GND
Connectable to Macintosh	Shorted
Not connectable to Macintosh	Open*

* Setting when delivered

(5) Logical specification type 0

The command specification and message specification are specified. The SCSI-1 specification is compatible with that of the old unit (M2511A). Table 3.11 shows the command and message specification settings.

Table 3.11 Logical specification type setting

Command specification and message specification	CNH 2/Pin 14 - GND
SCSI-2 specification	Open*
SCSI-1 specification	Shorted

* Setting when delivered

This page is intentionally left blank.

CHAPTER 4 INSTALLATION

4.1 **Notes on Drive Handling**

4.2 **Connection Modes**

4.3 **Settings**

4.4 **Mounting**

4.5 **Cable Connections**

4.6 **Operation Confirmation and Preparation for Use after Installation**

4.7 **Dismounting Drive**

This chapter describes notes on handling the drives, connection modes, settings, mounting the drives, cable connections, and operation confirmation and preparation for use after installation, and notes on demounting the drives.

4.1 Notes on Drive Handling

(1) General notes

Note the following points to maintain drive performance and reliability:

CAUTION

1) *Shock or vibration applied to the drive that exceeds the values defined in the standard damage the drive. Use care when unpacking.*

2) *Do not leave the drive in dirty or contaminated environments.*

3) *Since static discharge may destroy the CMOS devices in the drive, pay attention to the following points after unpacking:*

   - *Use an antistatic mat and wrist strap when handling the drive.*
   - *Hold the mounting frame when handling the drive. Do not touch the PCA except when setting the switches.*

4) *When handling the drive, hold both sides of the mounting frame. When touching other than both sides of the mounting frame, avoid putting force.*

5) *Do not forcibly push up the end of the header pin of the printed circuit board unit when handling or setting the drive.*

(2) Unpackaging

a) Make sure that the UP label on the package is pointing upward and start unpacking on a level surface. Handle the drive on a soft surface such as a rubber mat, not on a hard surface such as a desk.

b) Use care to avoid exerting excessive pressure on the unit when removing the cushions.

c) Use care to avoid exerting excessive pressure on the PCA surface and interface connectors when removing the drive from the antistatic bag.

d) If the temperature difference between installation locations is 10 degrees or more, leave the drive in the new location for at least two hours before unpackaging it.

(3) Installation

a) Do not connect or disconnect the connectors or change the terminal settings when the power is on.

b) Do not move the drive with the power on.

(4) Packaging

a) Before packaging, remove the optical cartridge.

b) Store the drive in an antistatic vinyl bag with desiccant (silica gel).

c) Use the same cushions and packaging supplied with the drive. If they are not available, ensure that adequate shock absorbent material is used. In this case, some method of protecting the PCA surface and interface connectors must be used.

d) Apply "UP" and "Handle With Care" labels to the outside of the package.

Figure 4.1 shows the packaging stile. (The form and material of the cushion may be changed.)

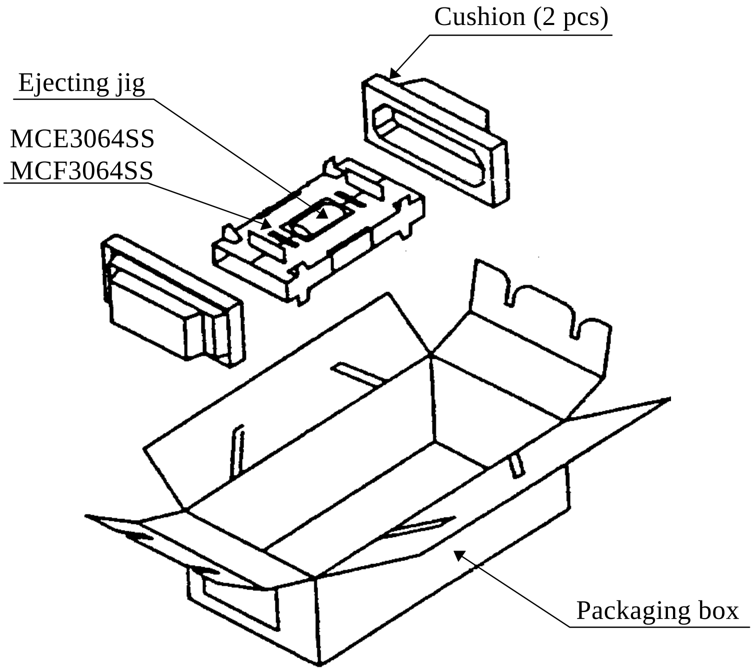

Figure 4.1 Packaging style

(5) Transportation

a) Transport the package with the UP sign upward.

b) After unpacking, minimize the transportation distance and use cushions to avoid shock and vibration. Transport the drive in one of the orientations described in Subsection 3.2.2 after unpacking. (The horizontal direction is recommended.)

(6) Storage

a) Use moistureproof packaging when storing the drive.

b) The storage environment must satisfy the requirements specified i n Subsection 2.1.3 when the drive is not operating.

c) To prevent condensation, avoid sharp changes in temperature.

4.2 Connection Modes

Figure 4.2 shows examples of connections between the host system and the optical disk drive. Up to eight devices including the host adapter, optical disk drive, and other SCSI equipment can be connected to the SCSI bus in arbitrary combinations. Install a terminating resistor on the SCSI devices connected to either end of the SCSI cable.

See Section 3.4 for the cable connection requirements and power cable connections.

(a) Connecting one optical disk drive

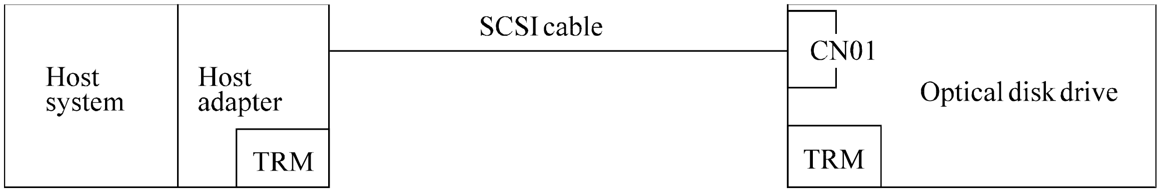

(b) Connecting more than one optical disk drive (single host)

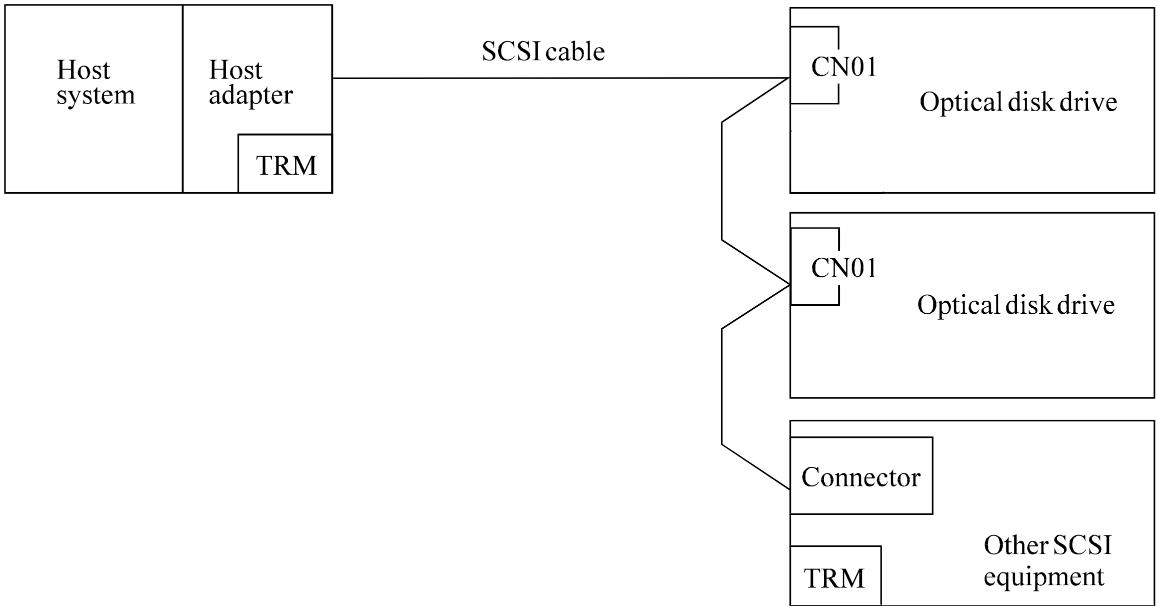

Figure 4.2 SCSI bus connection modes(1 of 2)

(c) Connecting more than one optical disk drive (multi-host)

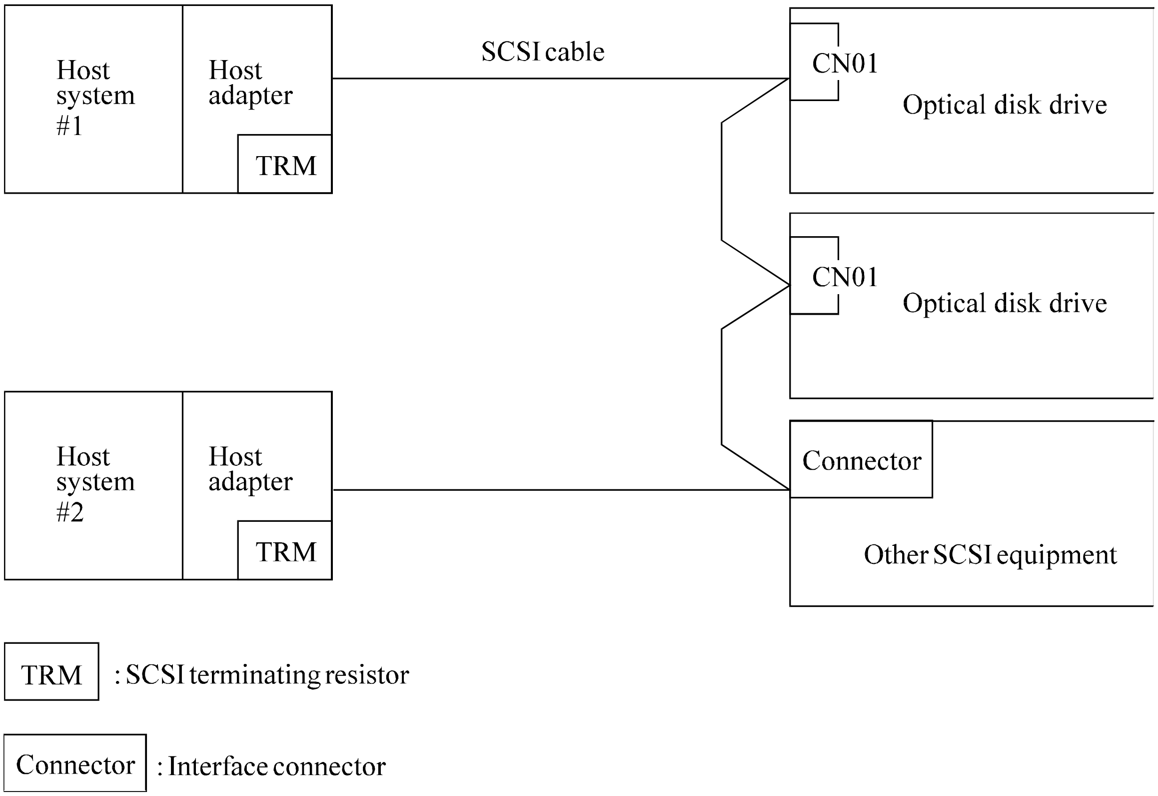

Figure 4.2 SCSI bus connection modes (2 of 2)

4.3 Settings

Before installing the drive in the system, set the following setting terminal, setting switches, and SCSI terminating resistors:

- Setting terminal : CNH1
- Setting switches : SW1

Figure 4.3 shows the positions of the setting terminal and switch.

CAUTION

1) *The user must not change the settings of terminals not described in this section. The terminals must remain as set when shipped.*

2) *Do not change terminal settings when the power is on.*

3) *To strap setting terminals, use the jumper shipped with the drive.*

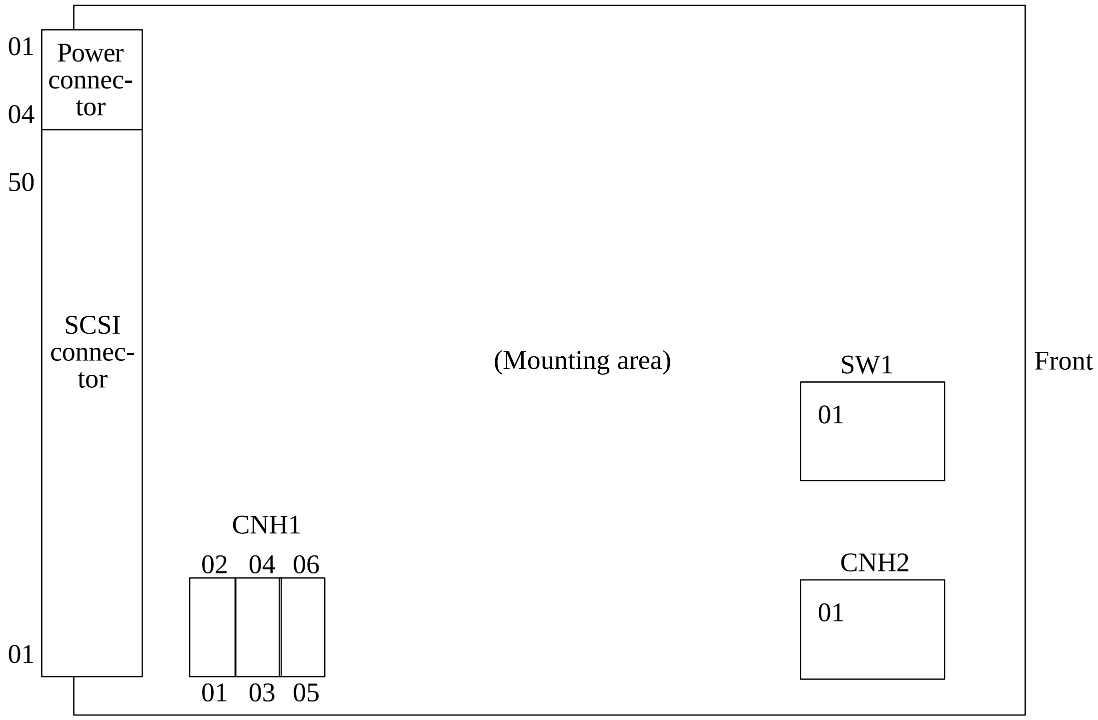

Figure 4.3 Positions of setting terminals and switches

Setting items are as follows:

- SW1
  - SCSI ID
  - SCSI data bus parity check
  - Write cache mode
  - Device type mode
  - Spindle automatic stop mode
  - Factory test mode (user setting inhibited)
- CNH1
  - SCSI terminating resistor power supply
  - SCSI terminating resistor
- CNH2
  - SCSI ID
  - Device type mode
  - SCAM mode
  - Verify mode
  - Macintosh mode
  - SCSI type
- SCSI connector
  - SCSI signal
- Power connector
  - +5VDC
  - GND

4.3.1 Setting switches (SW1)

Figure 4.4 shows the types of switches and their settings when the drive was shipped.

- SW1

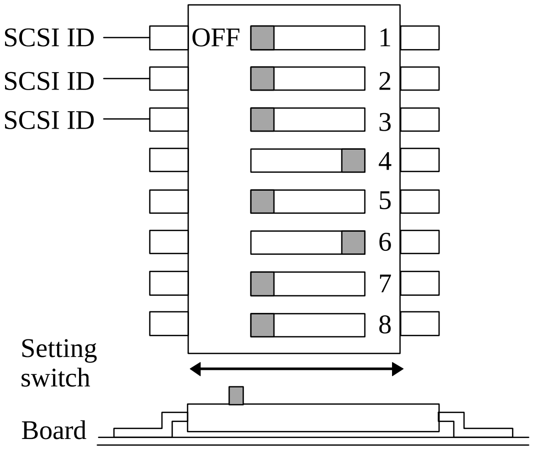

	Switch number	Signal name	At shipment
SW1	01 02 03	SCSI ID	OFF OFF OFF
	04	SCSI data bus parity check	ON
	05	Write cache mode	OFF
	06	Device type mode	ON
	07	Spindle automatic stop mode	OFF
	08	Factory test mode (user setting inhibited)	OFF

Figure 4.4 Setting switch (SW1)

(1) SCSI ID

Table 4.1 shows the SCSI ID settings of the drive.

Table 4.1 SCSI ID setting (SW1)

SCSI ID	SW1-01	SW1-02	SW1-03
0 (*1)	OFF	OFF	OFF
1	OFF	OFF	ON
2	OFF	ON	OFF
3	OFF	ON	ON
4	ON	OFF	OFF
5	ON	OFF	ON
6	ON	ON	OFF
7	ON	ON	ON

*1 Setting when delivered

IMPORTANT

1) *Each SCSI device connected to the same SCSI bus must have a unique SCSI ID.*

2) *If contention occurs in the ARBITRATION phase, the priority of the SCSI use authority depends on SCSI IDs as follows:*

7 >> 6 >> 5 >> 4 >> 3 >> 2 >> 1 >> 0

(2) SCSI data bus parity checking

Table 4.2 shows the settings which determine whether to check the SCSI bus parity bit. Regardless of the settings, the parity bit is ensured for data transmitted by the drive.

Table 4.2 SCSI data bus parity checking (SW1)

SCSI data bus parity checking by drive	SW1-04
Checked	ON (*1)
Not checked	OFF

*1 Setting when delivered

(3) Write cache mode

The write cache mode can be set. The write cache mode can also be enabled or disabled by the MODE SELECT command.

When the write cache mode is enabled, the cache control page is added to the code page of the mode parameter even if the SCSI-1 is set. Table 4.3 shows the settings of the write cache mode.

Table 4.3 Write cache mode setting

Write cache mode	SW1-05
Write cache is enabled at executing the WRITE/WRITE AND VERIFY command.	ON
Write cache is disabled at executing the WRITE/WRITE AND VERIFY command	OFF (*1)

*1 Setting when delivered

(4) Device type mode

Table 4.4 shows Device type mode setting.

Table 4.4 Device type mode setting

Device type mode	SW1-06
‘0x07’ optical memory drive	ON (*1)
‘0x00’ direct access drive	OFF

*1 Setting when delivered

(5) Spindle automatic stop mode

Normally, with the cartridge loaded, the spindle rotation is maintained until the spindle is instructed to stop by the START/STOP UNIT command. The spindle auto stop function automatically stops the spindle after the command has not been issued from the host for about 30 minutes (default value). When the command is issued from the host with the spindle automatically stopped, the optical disk derive turns the spindle again and performs processing in the same manner as in a ready state without posting a not ready state.

The access supervision time from the host is about 33 minutes as the default. However, it can be changed by the MODE SELECT command.

The spindle auto stop mode can also be changed by the MODE SELECT command.

Table 4.5 shows spindle auto stop mode setting.

Table 4.5 Spindle automatic stop mode setting

Spindle auto stop	SW1-07
The spindle motor automatically stops.	ON
The spindle motor does not automatically stop.	OFF (*1)

*1 Setting when delivered.

IMPORTANT

The characteristic of the spindle auto stop function are as follows:

Reduces the deposition of dust which could cause a cartridge error.

Not suitable for a system requiring quick response because it takes a few seconds to start the spindle.

4.3.2 Setting of supplying power to SCSI terminating resistor

Table 4.6 shows how to supply power to the SCSI terminating resistor module on the drive and how to use TERMPWR lines on the SCSI bus.

Table 4.6 SCSI terminating resistor power supply (CNH1)

SCSI terminating resistor power supply	CNH1 01-02	CNH1 03-04
Power is supplied from both of the drive and TERMPWR pin.	Short (*1)	Short (*1)
Power is supplied from the drive only. (TERMPWR pin is not used)	Short	Open
Power is supplied from TEMPWR pin only. (Drive’s power supply is not used)	Open	Short
No power is supplied.	Open	Open

*1 Setting when delivered

4.3.3 SCSI terminating resistormode

Enabling or disabling the SCSI terminating resistor, module on the PCA can be set.

When the drive positions at other than the end of the SCSI bus, the SCSI terminating resistor should be disabled. Table 4.7 shows the SCSI terminating resistor mode setting.

Table 4.7 SCSI terminating resistor mode(CNH1)

SCSI terminating resistor mode	CNH 1 05-06
SCSI terminating resistor module on the PCA is enabled.	Short (*1)
SCSI terminating resistor module on the PCA is disabled.	Open

*1 Setting when delivered

Open CNH1 5-6 pins when the SCSI terminating resistor set by CHN 2-15 pin.

4.4 Mounting

4.4.1 Checks before mounting the drive

Before mounting the optical disk drive in the system cabinet, check whether the setting switches and terminals are set correctly.

Table 4.8 shows the checklist.

Table 4.8 Setting checklist

		Setting item	Setting on:	Default	Check
Setting switch	1	SCSI ID	SW1-01 SW1-02 SW1-03	OFF OFF OFF	(SCSI ID=__) ☐OFF ☐ON ☐OFF ☐ON ☐OFF ☐ON
	2	SCSI data bus parity check	SW1-04	ON	☐OFF ☐ON
	3	Write cache mode	SW1-05	OFF	☐OFF ☐ON
	4	Device type mode	SW1-06	ON	☐OFF ☐ON
	5	Spindle automatic stop mode	SW1-07	OFF	☐OFF ☐ON
	6	Factory test mode (user setting inhibited)	SW1-08	OFF	☐OFF ☐ON

		Setting item	Setting on:	Default	Check
CNH1	1	Supplied from both ODD and TERMPWR pin.	CNH1 1-2 CNH1 3-4	Short Short	☐Short ☐Open ☐Short ☐Open
	2	Supplied from ODD	CNH1 1-2 CNH1 3-4	Short Short	☐Short ☐Open ☐Short ☐Open
	3	Supplied from TERMPWR pin.	CNH1 1-2 CNH1 3-4	Short Short	☐Short ☐Open ☐Short ☐Open

		Check item	Check
Terminating resistor	1	Drive location on SCSI bus	☐Other than end ☐Either end
	2	SCSI terminating resistor mode (CNH1 5-6)	☐Open ☐Short

4.4.2 Mounting procedure

How the drive is mounted depends on the system cabinet structure. Determine the mounting procedure in consideration of the requirements of each system. This section contains the general mounting procedure and check items.

See Section 3.2 for details on mounting drive.

1) For a system with an external operator panel mounted, connect the external operator panel cable before mounting the drive in the system cabinet because it is difficult to access the connector after the drive is mounted.

2) Tighten four mounting screws to secure the drive in the system cabinet.

- The drive has ten mounting holes (both sides: 3×2, bottom: 4). Secure the drive using the four mounting holes on both sides or the bottom.
- Use mounting screws whose lengths are 3 mm or less from the external wall of the mounting frame of the drive when they are tightened. (See Figure 3.6)
- When mounting with screws, the screw tightening torque should be 0.4 to 0.45Nm (4 to 4.6kgcm).
- Be careful not to damage the parts on the PCA when mounting the drive.

3) After securing the drive, make sure that the drive does not touch the chassis of the system cabinet. There must be at least 1.5 mm clearance between the drive and chassis. (See Figure 3.6)

4.5 Cable Connections

Use the following cables to connect the drive to the system. See Subsection 3.4.2 for details on the connector positions and cable requirements.

- Power supply cable
- SCSI cable
- DC ground cable (if required)
- External operator panel cable (if required)

The general procedure for cable connection and notes on connecting cables are given below. Pay attention to the insertion direction of each cable connector.

CAUTION

1) *Make sure that the system power is off.*

2) *Do not connect or disconnect any cable when the power is on.*

1) Connect the DC ground cable (only if required to decrease ground noise).

2) Connect the power cables.

3) Connect the external operator panel (only if required for the system).

4) Connect the SCSI cable.

5) After each cable connector is connected, secure the cable so that the cable does not touch the drive or the parts on the PCA or obstruct the flow of cooling air in the system cabinet.

⚠CAUTION

1) *Be careful of the insertion directions of SCSI connectors. For a system in which the terminating resistor power is supplied via the SCSI cable, connecting connectors in the wrong direction may cause the following:*

   The overcurrent protection fuse of the terminating resistor power supply (SCSI device) may blow when power is turned on.
   The cable may burn if overcurrent protection is not provided.

2) *Be careful of cable connector positions when connecting more than one SCSI device. The SCSI device having the terminating resitor must be connected to the end of the cable.*

3) *The cables must be kept away from the rotating part of the spindle motor.*

4.6 Operation Confirmation and Preparation for Use after Installation

4.6.1 Confirming initial operations

This section provides the operation check procedures after the power is turned on.

(1) Initial operation when the power is turned on

- When the power is turned on, the drive starts initial self-diagnosis. The LED on the front panel is on for 3 seconds during initial self-diagnosis.
- If an error is detected during initial self-diagnosis, the LED on the front panel blinks.
- In case of not inserted the cartridge, when the power is turned on, the eject motor automatically turns once.

(2) Checks if errors occur at initial self-diagnosis

- Make sure that the cables are connected correctly.
- Make sure that the supply voltage is correct. (Measure the voltage at the power supply connector of the optical drive.)
- Make sure that the settings of all terminals are correct.

- If the LED on the front panel blinks continuously, an error was detected during initial self-diagnosis. In this case, issue the REQUEST SENSE command from the initiator (host system) to obtain sense data for error analysis.

IMPORTANT

The BUSY LED is on while the optical disk drive is executing seek, write, or read operations. The BUSY LED is on momentarily, so it seems as if it blinked or is off.

If the cartridge fails to be inserted, remove the cartridge and turn on the drive power to turn the eject motor once and reinsert the cartridge.

4.6.2 SCSI connection check

When initial operation checks out normally after the power is turned on, check whether the drive is correctly connected to the SCSI bus from the host system. Checking the SCSI connection depends on the host system configuration. This section describes the general procedure.

(1) Procedure

Figure 4.5 shows the recommended checking procedure.

Note:

Steps a) to c) correspond to a) to c) in Figure 4.5.

a) Issue the TEST UNIT READY command and check that the drive is connected correctly to the SCSI bus.

b) Use the WRITE BUFFER and READ BUFFER commands to check whether the SCSI bus operates normally. Use data whose bits change to 0 or 1 at least once. (Example: A X'00' to X'FF'increment pattern)

c) Check whether the settings are correct. Also, make sure that the controller and drive operate normally.

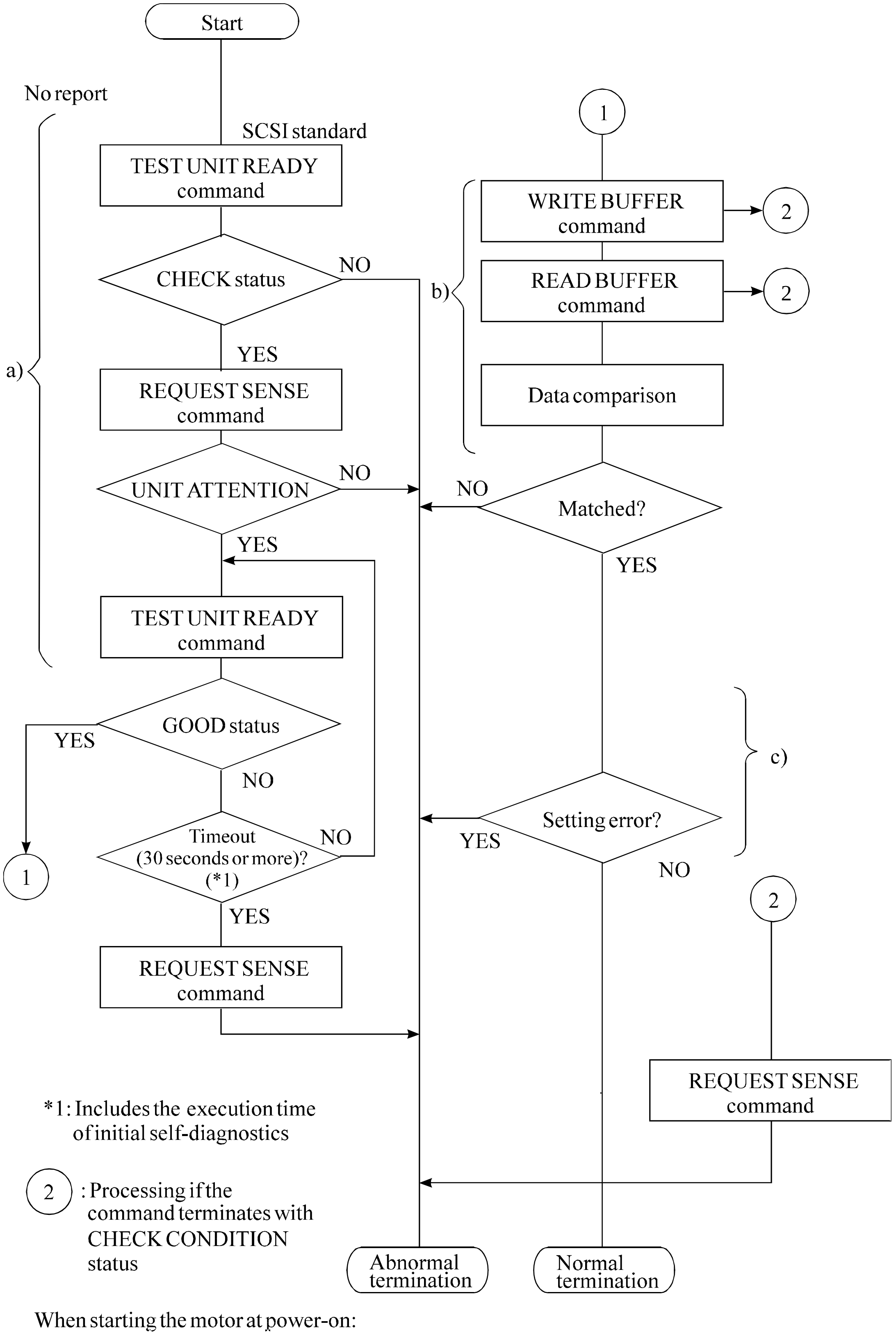

Figure 4.5 SCSI connection check

(2) If processing terminates abnormally:

a) If sense data has been obtained by the REQUEST SENSE command, analyze the sense data. If the error is recoverable, retry the processing.

b) Check the following items for SCSI cable connection:

- All connectors, including other SCSI devices, are connected correctly.
- A terminating resistor is correctly mounted at both ends of the cable.
- Power is supplied to the terminating resistors correctly.

c) Check the settings of all terminals are correct. Note that the procedure of checking the SCSI connection depends on the setting of "spindle automatic stop".

4.7 Dismounting Drive

How to demount an optical disk drive (for setting terminal checking, setting change, or device replacement) depends on the system cabinet configuration. Determine the demounting procedure in consideration of the requirements of each system. This section describes the general demounting procedure and notes on demounting drives.

CAUTION

Before demounting the optical disk drive, turn off the system power. Do not remove screws securing the cables and drive when the power is on.

1) Remove the power cable.

2) Remove the SCSI cable.

3) When an external operator panel is mounted, remove its cable. If it is difficult to access the connector, remove the cable after step e).

4) Remove the DC ground cable.

5) Remove the four screws securing the drive, then remove the drive from the system cabinet.

6) When storing or transporting the drive, put the drive into an antistatic bag. (See Section 4.1.)

This page is intentionally left blank.

CHAPTER 5 OPERATION AND CLEANING

5.1 Operating Optical Disk Drive
5.2 Cleaning Drive
5.3 Optical Disk Cartiridge Operation
5.4 Cleaning Optical Disk Cartiridge

This chapter describes how to operate and clean the drive and the optical disk cartridges.

5.1 Operating Optical Disk Drive

The drive has an automatic load function. All the operator must do is to insert the optical disk cartridge and operate the eject button.

This section explains loading and ejection methods, assuming that the drive is mounted horizontally. (When mounted vertically, the drive is operated in the same manner as when mounted horizontally.)

Figure 5.1 shows the front view of the optical disk drive. For operation, users should be familiar with the parts in the figure and their function. Loading and ejection methods are described below.

5.1.1 Optical disk drive

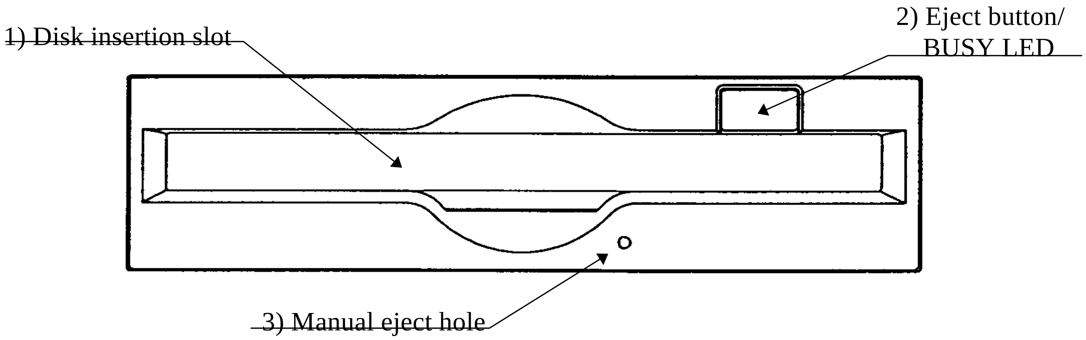

Figure 5.1 Optical disk drive front view (with panel)

The following explains the parts and functions of the optical disk drive (the following numbers correspond to the numbers in Figures 5.1):

1) Disk insertion slot

Use this slot to insert and eject the optical disk cartridge.

2) Eject button & BUSY LED (display lamp)

On this optical disk drive, this is the push button combining the eject button with the BUSY LED (display lamp) for ejecting the optical disk cartridge (it lights in green during seeking and during erasing, writing or reading of data). When ejection is disabled by the SCSI command, the optical disk cartridge cannot be taken out.

3) Manual eject hole

This hole is used to eject the optical disk cartridge manually at power-off. Manual ejection may not be possible just after the power is off.

5.1.2 Note

To maintain the performance and reliability of the drive, keep the following point in mind:

- When the drive is in the busy state, do not eject the optical disk cartridge.
- Particularly, do not manually eject the cartridge by force.
- Be careful sufficiently not to insert the different drive (etc. floppy disk) or substance, so it is cause of the accident.

5.1.3 Inserting cartridge

Insert the cartridge as explained below.

(1) When the drive power is on:

1) Make sure that no disk cartridge is in the drive.

2) Keep the cartridge shutter surface upward.

3) Insert the cartridge, shutter first, into the disk insertion slot.

4) Push the cartridge into the slot until it completes moving below (a little further in than the operator panel).
Loading is started when the cartridge is inserted. After several seconds, the BUSY LED indicator lamp is turned on and immediately turned off to complete loading.

Notes

1) The cartridge must be completely inserted until the BUSY LED indicator lamp is lit.

2) If the cartridge is inserted by pushing either left or right side of the cartridge rear, it may not be inserted completely. Be sure to push the central part straight into the drive until it is completely inserted.

3) If the BUSY LED indicator lamp does not light when the cartridge is inserted, once eject the cartridge by pressing the eject/BUSY LED button and insert it again.

4) If you attempt to insert the cartridge by force, trouble may result in the drive. In such a case, be sure to once remove the cartridge and check the insertion direction and the face and back of the cartridge before inserting it again.

(2) When the drive power is off:

1) Make sure that no optical disk cartridge is in the disk drive.

2) Keep the cartridge shutter surface upward.

3) Insert the cartridge, shutter first, into the disk insertion slot.

4) Push the cartridge into the slot until it completes moving below (a little further in than the operator panel).

The cartridge remains inserted in the drive. The BUSY LED indicator lamp lights when the drive power is turned on.

The cartridge remains inserted in the drive. Turning on the drive power starts loading. (The LED indicator lamp should light.)

Notes

1) If the BUSY LED indicator lamp does not light when the power is turned on, once eject the cartridge by pressing the eject button and insert it again until the lamp is lit.

2) If the cartridge is inserted by pushing either left or right side of the cartridge rear, it may not be inserted completely. Be sure to push the central part straight into the drive until it is completely inserted.

3) If you attempt to insert the cartridge by force, trouble may result in the drive. In such a case, be sure to once remove the cartridge and check the insertion direction and the face and back of the cartridge before inserting it again.

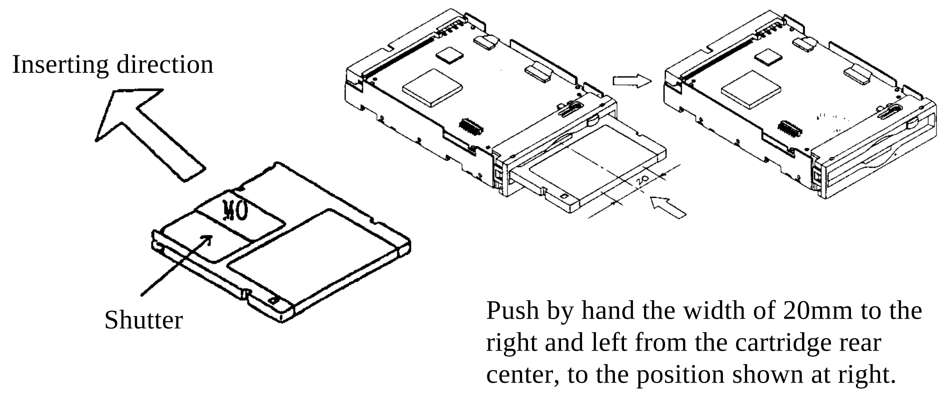

Figure 5.2 Inserting cartridge

5.1.4 Ejecting (removing) cartridge

Remove the cartridge as explained below.

(1) When the drive power is on:

1) The cartridge can be removed by pressing the e ject button.

Notes:

1. If the SCSI command prevents ejection, the cartridge cannot be removed.
2. Remove the cartridge when completely ejected.

Note:

Even if the drive set-up conditions are met, note that the cartridge can drop from the drive after ejection depending on the ambient environment and the cartridge's condition.

(2) When the drive power is off:

If the drive power is off, the cartridge cannot be removed by pressing the eject button. The cartridge can be removed by insert the eject jig (accessary) or a pin (diameter: about 1 mm) into the manual eject hole.

Notes

1) NEVER attempt to eject the cartridge while the BUSY LED lamp is on. The data may be destroyed or trouble may result in the drive.

2) Note that the cartridge may drop from the drive when it is ejected.

3) The optical disk drive unit should not be carried around with a cartridge loaded inside.

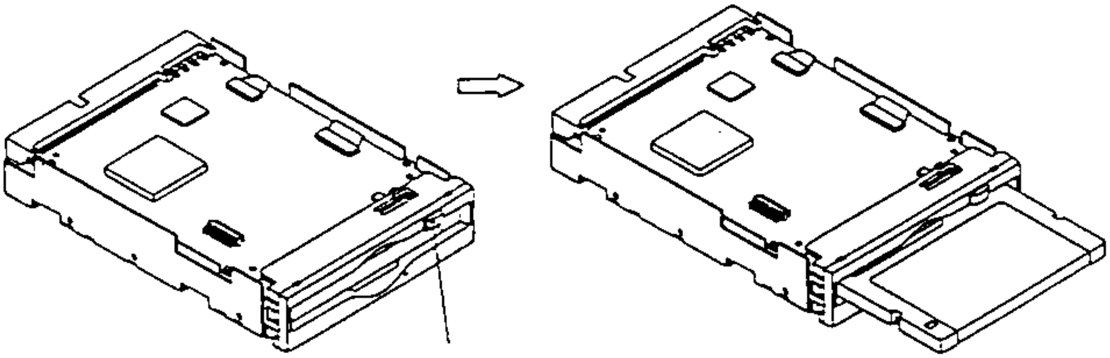

Figure 5.3 Removing cartridge

5.2 Cleaning Drive

When a dust or smoke of cigarette is stained to the lens actuator, a performance of whole drive may be down. Clean the lens actuator periodically using following head cleaner.

Note:

Cleaning period differs depending on the installation condition. Usually, cleaning period is once a six months.

Table 5.1 Head cleaner

Part name	Order number
Head cleaner	CA90002-C980

(1) Cleaning method

Clean the head actuator with following method.

1. Turn on the power of the drive.

2. Insert the head cleaner.

3. When the head cleaner is automatically loaded, the positioner moves back and forth and the cleaning brush mounted on the head cleaner cleans the object lens.

4. When the cleaning is finished, the head cleaner is automatically unloaded. (cleaning time: 15 seconds)

IMPORTANT

Check the cleaning brush state by opening the shutter of the head cleaner. If the tip of brush is open, use new head cleaner.

5.3 Optical Disk Cartridge Operation

5.3.1 Optical disk cartridge

Figure 5.4 shows the optical disk cartridge. For operation and cleaning, users should be familiar with the parts shown in the figure.

See Subsection 2.3.2 for the functions of the parts.

- Shutter closed

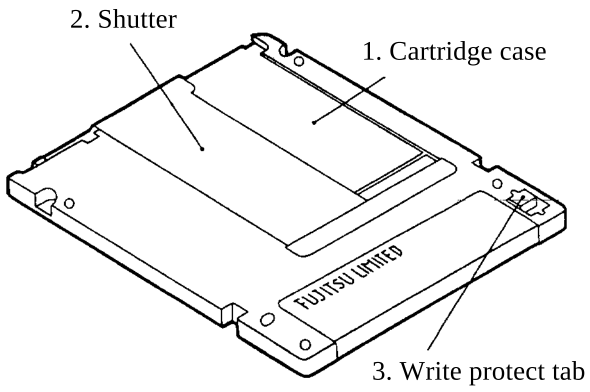

- Shutter open

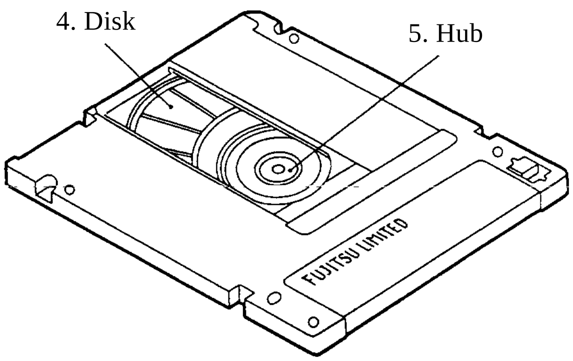

Figure 5.4 Optial disk cartridge

5.3.2 Write protect tab

Moving the write protect table determines whether to enable or disable writing of the optical disk cartridge. Use a fingernail to move the write protect tab (it must be completely moved to the end because there is play in the middle).

Figure 5.5 shows the write protect tab location on the optical disk cartridge and the moving state of the write protect tab (see "write enabled" and write disabled" entered on the label).

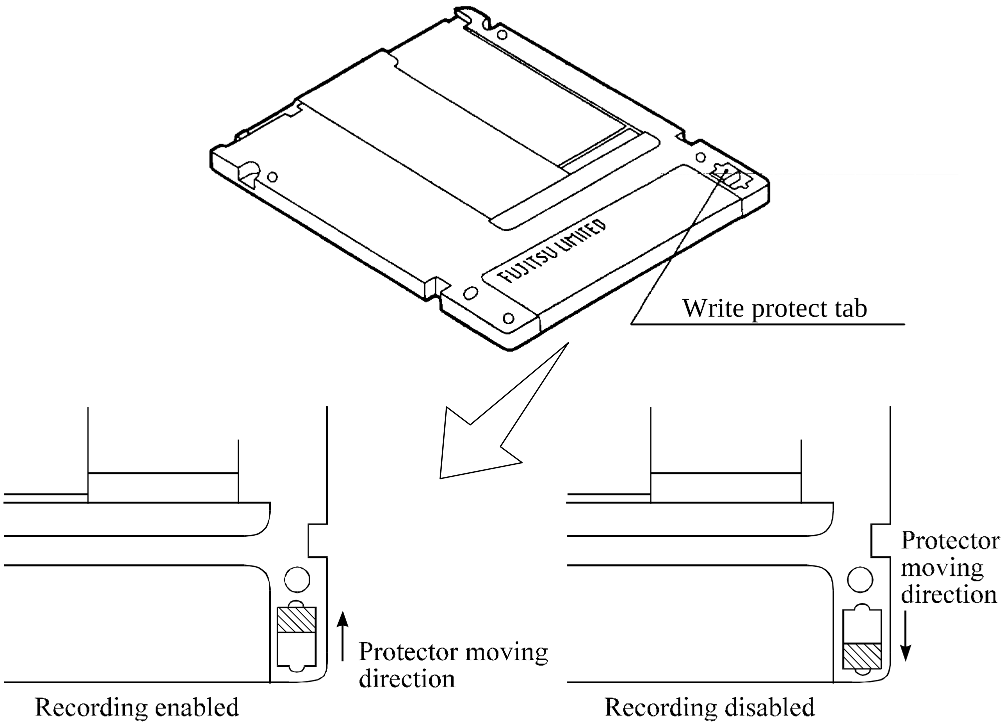

Note:

The hatched part indicates the write protect tab location.

Figure 5.5 Write protect tab

5.3.3 Notes

To maintain the performance and reliability of the optical disk cartridge, keep the following points in mind when using, storing, or transporting the cartridge:

(1) When using the cartridge:

- Do not use the cartridge where exposed to direct sunlight or where the temperature changes sharply, the temperature is high, or the humidity is high.
- Do not apply excessive pressure to the cartridge case or shutter. Avoid dropping the cartridge.
- Do not use the cartridge in a dusty or smoky place.
- Do not open the shutter or touch the disk surface.

(2) When storing the cartridge:

- Do not place a heavy objects on the cartridge.
- Do not store the cartridge where exposed to direct sunlight or where the temperature changes sharply, the temperature is high, or the humidity is high.
- Do not store the cartridge in a dusty or smoky place.

(3) When transporting the cartridge:

- Put the cartridge in a nylon bag to protect it from moisture.
- Put the cartridge in a strong container and cover the cartridge with cushioning material.

5.4 Cleaning Optical Disk Cartridge

Dust or cigarette smoke pariticulates on the disk surface lowers the performance of the cartridge. Regularly clean the disk. The cleaning frequency depends on the drive installation environment. Determine how often the drive should be cleaned in consideration of the environment. A standard of he cleaning period is every 400 hours usage or once a 2 to 3 months.

5.4.1 Cleaning tool

Use the cleaning kit to clean the disk cartridge.

(1) Cleaning kit

This cleaning kit is only for 3.5-inch optical disk cartridge. Use with reading the attached operation guide well. Table 5.2 shows the order number of the cleaning kit.

Table 5.2 Cleaning kit

Part name	Order number
Cleaning kit	CA90003-0702

Table 5.3 shows the packaged items in the cleaning kit.

Table 5.3 Packaged items (cleaning kit)

Name	Contents
Setting case	1 piece
Cleaning cloth	5 pieces (70mm ×70mm)
Cleaning solution	1 bottle (20ml)

The following sub-kit is available as a set of the cleaning solution and cleaning cloth as supplement.

- Order No. CA90002-D901

⚠CAUTION

Use the cleaning solution and cleaning cloth specified in Table 5.2. If other than the specified items is used, disk media surface may be damaged.

(2) Notes on usage and storage of cleaning kit

- When storaging the cleaning solution, tighten the cap.
- As the magnet is used at revolving knob of the setting case, do not place the floppy disk near the revolving knob.
- Do not use or storage where exposed to direct sun ligth or near the inflammables.
- Keep out of the reach of childen.

⚠CAUTION

Do not use this cleaning kit for the floppy disk or the optical disk cartridge used for other optical disk drive.

5.4.2 Cleaning procedure

Clean the disk cartridge with a following procedure.

![CAUTION]

CAUTION

Clean the cartridge at clean place. Put a disposable groves at cleaning so that the figureprint does not put on the disk media (recommendation).

1) Slide the shutter completely open.

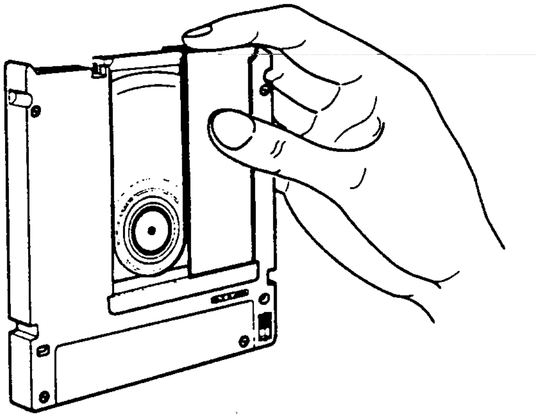

Figure 5.6 Cleaning procedure (1)

2) Set the cartridge with keeping label side down and shutter open to the shutter stopper of the setting case as shown in Figure 5.7.

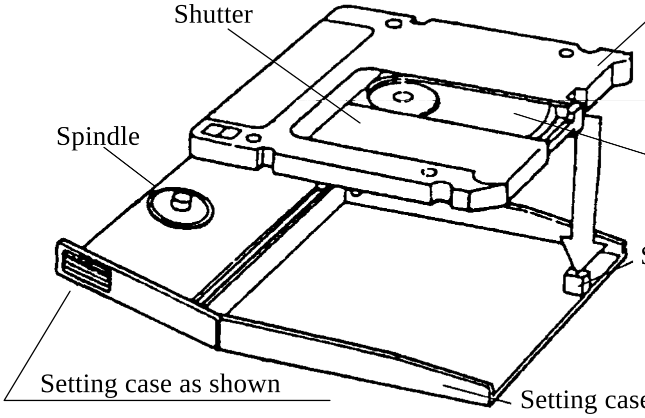

Figure 5.7 Cleaning procedure (2)

⚠CAUTION

At setting the cartridge to the setting case, do not apply the heavy shock and push hardly.

3) Cover the cartridge with the setting case cover, then insert the spindle pin into the center hub of the cortridge.

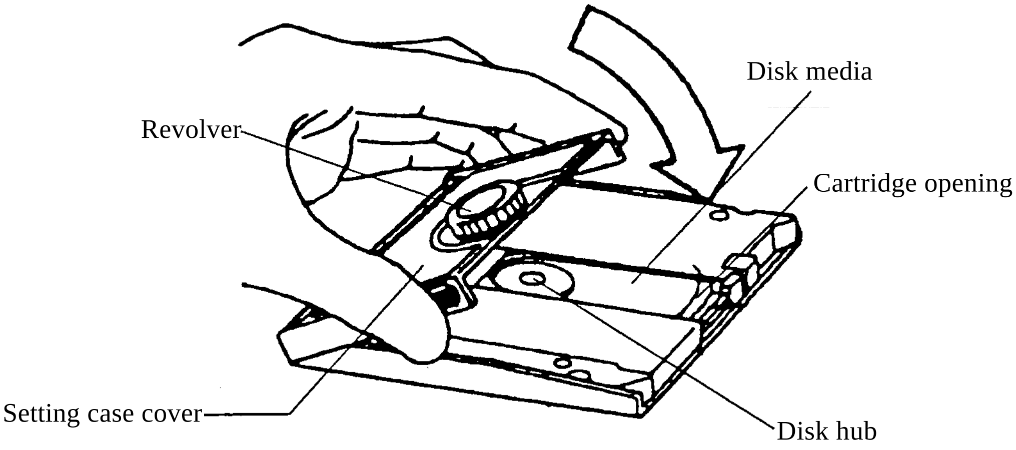

Figure 5.8 Cleaning procedure (3)

4) Remove a slender piece that causes a defect from the disk surface at wiping the disk media.

5) Moisten the cleaning cloth with a few drops of cleaning solution.

⚠CAUTION

In case of contact with eyes, immediately flush eyes with water.

6) Wipe the disk surface from the hub outward.

7) Turn the revolving knob, then wipe the disk surface.

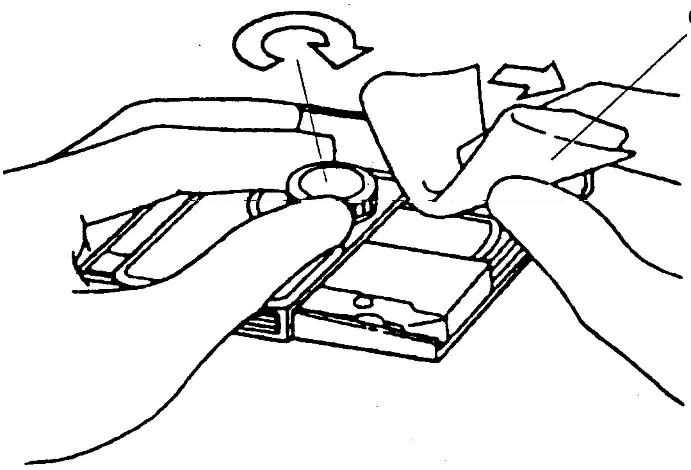

Figure 5.9 Cleaning procedure (4)

8) If the excess cleaning solution remains on the disk surface, wipe out with the cleaning cloth.

This page is intentionally left blank.

CHAPTER 6 DIAGNOSIS AND MAINTENANCE

6.1 Diagnosis

6.2 Maintenance Information

This chapter contains diagnosis and maintenance information.

6.1 Diagnosis

Table 6.1 shows a test executed by the diagnostic function.

The drive has a self-diagnostic function. This function can check the basic operations of the drive.

A test program running in the host system is required to check general operations, including operations of the interface with the host system. (See Subsection 6.1.3.)

Table 6.1 Self-diagnostic function

Diagnostic contents	Target
Initial self diagnosis	Basic operation (hardware function test)
Diagnostic command	Basic operation
Test program	General operation

6.1.1 Initial self-diagnosis

When the power is turned on, the optical disk drive starts initial self-diagnosis. Basic hardware functions are tested during initial self-diagnosis.

The hardware function test checks the normality of the basic controller operation. This test includes the normality check of the ROM in which microcodes are stored, microprocessor (MPU) peripheral circuit test, memory (RAM) test, and data buffer test.

If an error is detected during initial self-diagnosis, the LED on the drive front panel blinks. The drive posts the CHECK CONDITION status to all input/output operation requests other than the REQUEST SENSE and INQUIRY commands. It also returns the MESSAGE REJECT message in response to messages except the IDENTIFY message. The initiator should issue the REQUEST SENSE command if the CHECK CONDITION status is posted. Sense data obtained by the REQEST SENSE command explains in detail the error detected during initial self-diagnosis. This status is held and the LED on the front panel blinks continuously even if the CHECK CONDITION status or sense data is posted. This status can be cleared only when RESET is executed for the SCSI bus or the power is turned off or on. The drive reexecutes initial self-diagnosis when this status is cleared.

6.1.2 Diagnostic command

The host system can make the ODD execute the self diagnosis by issuing The SEND DIAGNOSTIC command with specifying the Self Test operation. When the self diagnosis terminates successfully, a GOOD status is reported. When the self diagnosis terminates abnormally, a CHECK CONDITION status is reported. In this case, HARDWARE ERROR [=4] is set in the sense key and the detail error code is set in the additional sense key.

6.1.3 Test program

A test program running in the host system is required to check general operations such as operations of the interface with the host system and simulated operations.

The configuration and function of the test program depend on the user system requirements. Prepare a general input-output test program which applies to all SCSI devices connected to the SCSI bus and input-output equipment at other input-output ports.

The test program should include the following tests:

(1) Interface (SCSI bus) test

Use the WRITE BUFFER and READ BUFFER commands to check SCSI bus operations and whether the data buffer in the drive is normal.

(2) Random/sequential read test

Use the READ or VERIFY command to test positioning (seek) operation and read operation in random access mode and sequential access mode.

(3) Write/read test

Use a disk whose operation check data may be destroyed so that a write or read test can be executed with an arbitrary data pattern.

6.2 Maintenance Information

6.2.1 Maintenance requirements

Service system and repair

Fujitsu provides a service system and repair facility for its optical disk drive. Submit information required to replace or repair the drive to your Fujitsu representative. The following information should be included:

a) Optical disk drive model, part number (P/N), revision number, serial number (S/N), and date of manufacture

b) Failure status

- Date of the failure
- System configuration
- Environment conditions (temperature, humidity, and supply voltage)

c) Failure history

d) Failure

- Description of the failure
- Issued commands and specified parameters
- Sense data
- Other error analysis information

CAUTION

Data loss
In case of regular repair, the optical disk cartridge should not be attached except where the cartridge causes the error. And before having the drive repaired, save the data in the cartiridge. Fujitsu is not responsible for data lost during maintenance or repair.

See Section 4.1 for details on packing and handling the drive when sending it to Fujitsu.

6.2.2 Revision number

The revision number of an optical disk drive is represented with an alphabetic character and a single-digit number. The revision number is shown on the revision label attached to the drive. For example, Figure 6.1 shows the MCE3064SS revision label format.

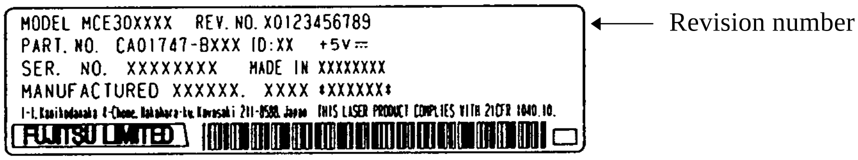

Figure 6.1 Revision label

(1) Revision number indication

When the drive is shipped, the revision number is indicated by deleting the numbers up to the corresponding number on the line of alphabetic characters. (Each number is deleted with double lines =. See Figure 6.2.)

(2) Changing the revision number on site

When the revision number is changed on site because of parts replacement or modification, the new revision number is indicated by circling the number on the line of alphabetic characters. (See Figure 6.2.)

NOTICE

When a revision number is changed after shipment, Fujitsu issues "Revision Number Change Request/Notice" to indicate the new revision number. The user must update the revision label as described above when changing the revision number.

Revision number indicated on shipment

REV. NO. A ~~0~~ ~~1~~ ~~2~~ 3 4 5 6 7 8 9 ⇒ Revision A2

Revision number changed on site

REV. NO. A ~~0~~ ~~1~~ ~~2~~ (3) 4 5 6 7 8 9 ⇒ Revision A3

Figure 6.2 Revision number indication

CHAPTER 7 SCSI BUS

7.1 System Configuration

7.2 Interface Signal Definition

7.3 Electrical Requirements

7.4 Timing Rule

7.5 Bus Phases

7.6 Bus Conditions

7.7 Bus Sequence

This chapter describes the structure of the SCSI bus, electrical conditions, interface protocol and their operations.

IMPORTANT

The ODD operates on the SCSI bus as a TARG. In this chapter, the ODD is represented as "TARG" except where some special distinction must be made.

7.1 System Configuration

Up to eight SCSI divices can be connected to the SCSI bus. Figure 7.1 shows sample system configurations. Communication on the SCSI bus is allowed between only two SCSI divices, an initiator (INIT) and a target (TARG), at any given time.

In the configured system, any combination is allowed for an SCSI device to work as an INIT and as a TARG. Also, there may be an SCSI device that works as both an INIT and a TARG.

A unique address (SCSI ID) is assigned to each SCSI device. The SCSI ID corresponds to one bit of the SCSI data bus. The INIT designates an I/O device connected to the TARG by its logical unit number (LUN).

The SCSI ID of the ODD can be selectable among #0 to #7, but the LUN is fixed to #0.

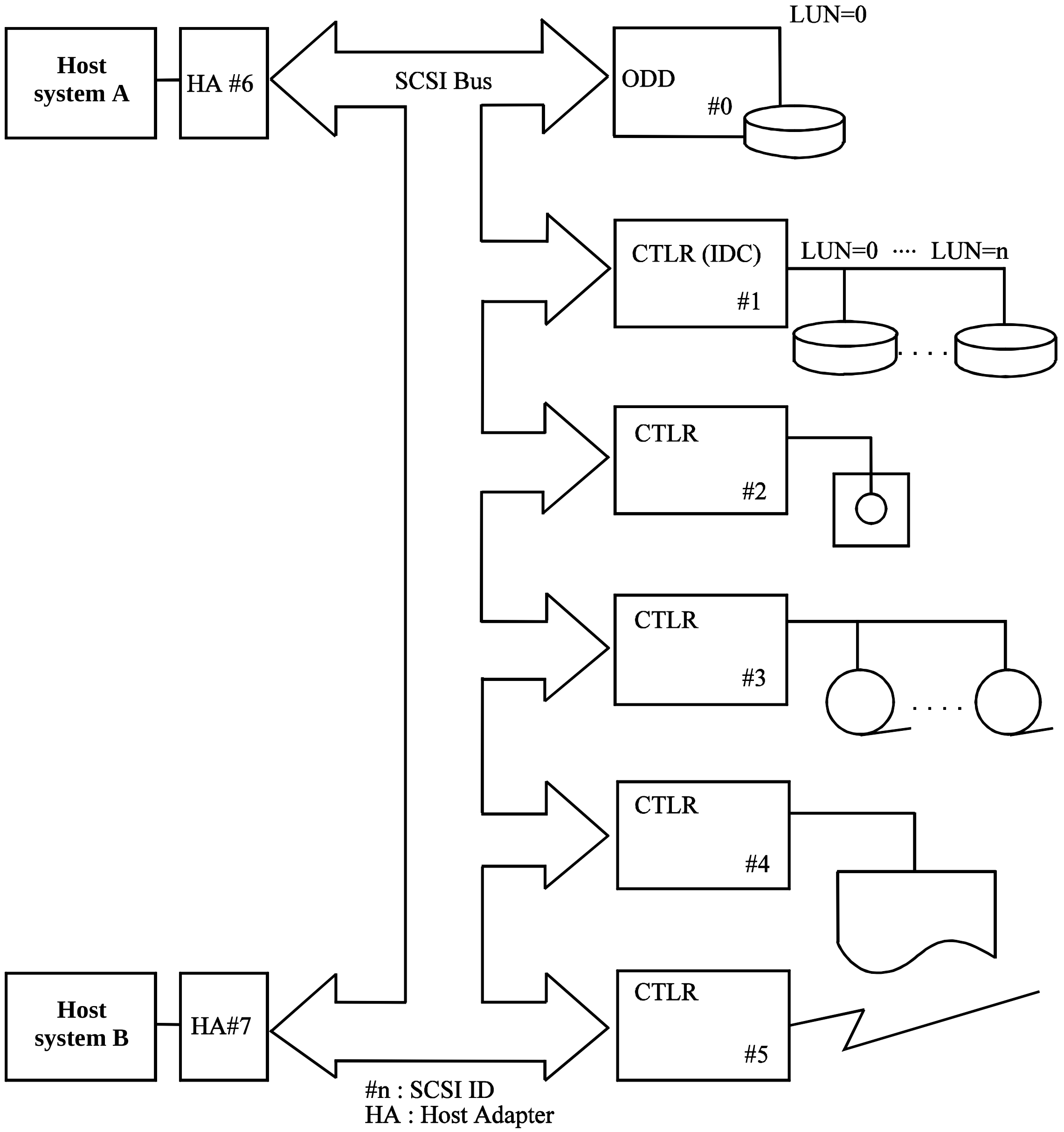

Figure 7.1 Example of SCSI configuration

7.2 Interface Signal Definition

There is a total of eighteen signals. Nine are used for control and nine are used for data (1 byte data + 1 odd parity bit). Figure 7.2 shows interface signal lines.

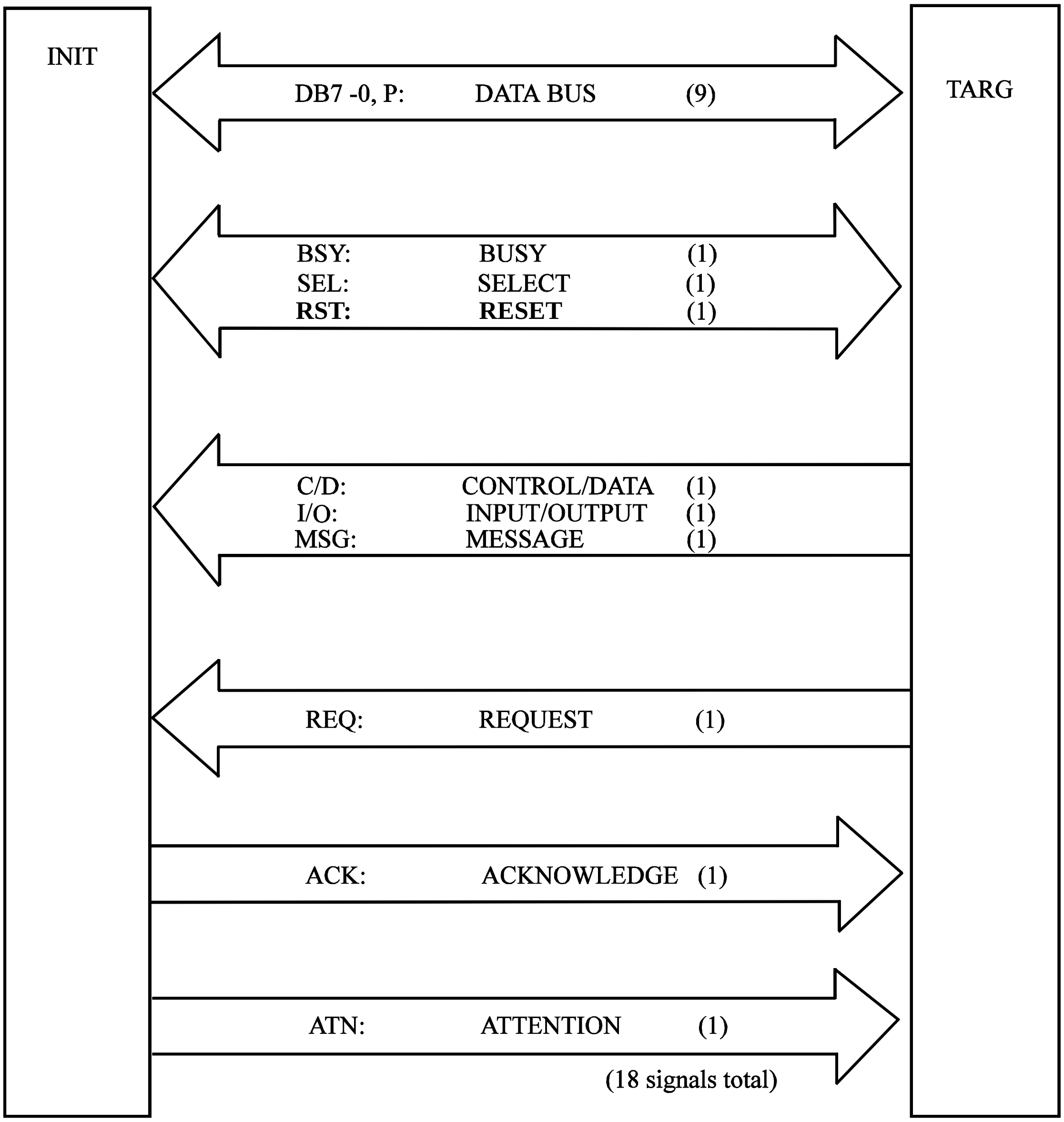

Figure 7.2 Interface signals

(1) DB 7 to 0, P (DATA BUS)

These signals form a bidirectional data bus consisting eight data bits and an odd parity bit.

MSB (27): DB7, LSB (20): DB0

The DATA BUS is used to transfer commands, data, status, or messages in the INFORMATION TRANSFER phase. SCSI IDs are sent to the DATA BUS in the ARBITRATION phase for determining the priority of bus arbitration. In the SELECTION or RESELECTION phase, SCSI IDs of the INIT and the TARG are indicated on the DATA BUS. Figure 7.3 shows the correspondence between DATA BUS bits and SCSI IDs.

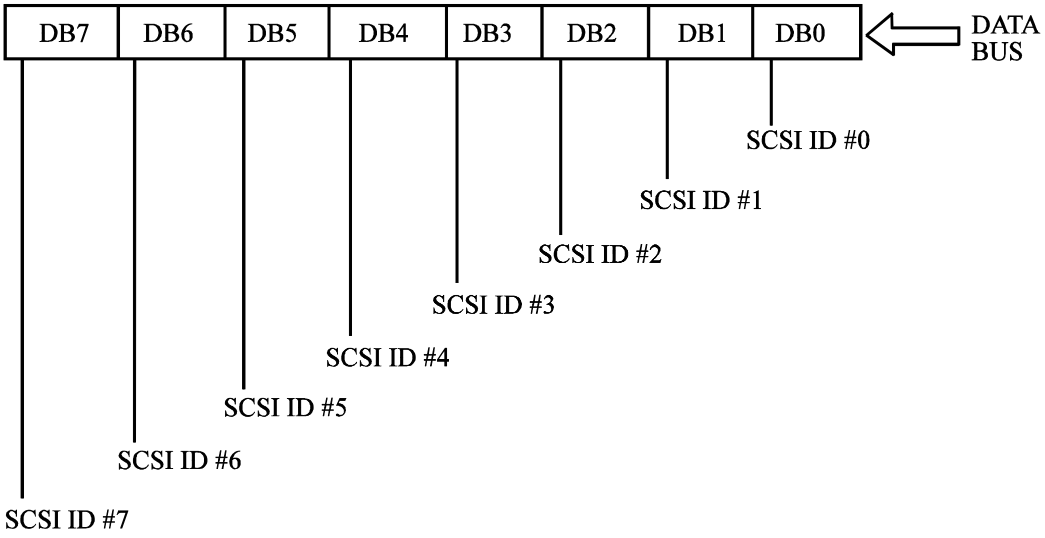

Figure 7.3 DATA BUS and SCSI ID

When the DB(n) signal is true, the data bit (n) is 1, and when false, it is 0.

The use of a parity bit is a system option. The ODD handles parity as shown below:

- The ODD implements the bus parity check feature, which can be enabled or disabled by a setting terminal on the ODD. For the setting terminal, refer to Item (2) in Subsection 4.3.1 in OEM Manual -Specifications & Installation-.

- Parity values are always guaranteed when valid data is transferred to the data bus from the ODD in a phase other than the ARBITRATION phase.

(2) BSY (BUSY)

This signal indicates that the SCSI bus is being used. In the ARBITRATION phase, it indicates an arbitration request.

(3) SEL (SELECT)

This signal is used by an INIT to select a TARG (SELECTION phase) or by a TARG to reselect an INIT (RESELECTION phase).

(4) C/D (CONTROL/DATA)

This signal is driven by a TARG to identify the type of information transferred on the DATA BUS in combination of I/O and MSG signals. (See Table 7.1)

(5) I/O (INPUT/OUTPUT)

This signal is driven by a TARG to specify the information transfer direction on the DATA BUS or to identify a SELECTION or RESELECTION phase. (See Table 7.1)

(6) MSG (MESSAGE)

This signal is driven by a TARG to indicate that a message is being transferred on the DATA BUS. (See Table 7.1)

(7) REQ (REQUEST)

This signal is driven by a TARG to indicate a transfer request to an INIT in INFORMATION TRANSFER phase.

(8) ACK (ACKNOWLEDGE)

This signal is driven by an INIT to indicate a response for REQ signal to a TARG in the INFORMATION TRANSFER phase.

(9) ATN (ATTENTION)

This signal is driven by an INIT to indicate that the INIT has a message to be transferred to the TARG and is used to generate an ATTENTION condition.

(10) RST (RESET)

This signal indicates the RESET condition which is used to clear all SCSI devices on the bus.

Table 7.1 INFORMATION TRANSFER phase identification

C/D	I/O	MSG	DB7-0, P	Direction	Phase
0	0	0	Data	INIT → TARG	DATA OUT
0	1	0	Data	INIT ← TARG	DATA IN
1	0	0	Command (CDB)	INIT → TARG	COMMAND
1	1	0	Status	INIT ← TARG	STATUS
0	0	1	–	–	not used
0	1	1	–	–	not used
1	0	1	Message	INIT → TARG	MESSAGE OUT
1	1	1	Message	INIT ← TARG	MESSAGE IN

7.3 Electrical Requirements

7.3.1 SCSI interface

(1) Driver and receiver

For the interface signal driver, an open-collector or tri-state buffer circuit that satisfies the following output characteristics is used. All signals are negative logic (true = "L").

The receiver and non-driver of the SCSI device under the power-on state should satisfy the following input characteristics on each signal.

Output characteristics
V_{OL} = 0.0 to 0.50 VDC (@ I_{OL} = 48 mA)
V_{OH} = 2.5 to 5.25 VDC

Input characteristics
V_{IL} = 0.0 to 0.80 VDC
I_{IL} = –0.4 to 0.0 mA (@ V_I = 0.5 VDC)
V_{IH} = 2.0 to 5.25 VDC
I_{IH} = 0.0 to 0.1 mA (@ V_I = 2.7 VDC)
Input hysteresis = 0.2 VDC min.
Input capacitance = 25 pF max.

Note:

The SCSI device under the power-off state should satisfy the characteristics of I_{IL} and I_{IH}.

Recommended circuit
Driver: MB463 (Fujitsu) or SN7438 (TI) (Open-collector NAND gate)
Receiver: SN74LS240 or SN74LS19 (TI) (Schmitt trigger input inverter)

(2) Termination circuit

The termination circuit is a resistor termination as shown in Figure 7.4. The termination circuits are installed in SCSI devices which are connected at both ends of the interface cable.

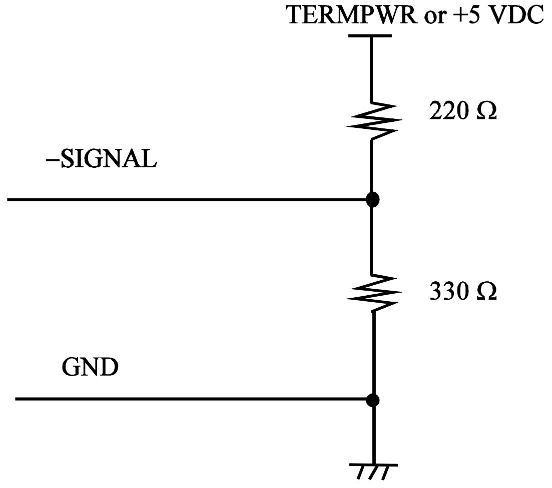

Figure 7.4 SCSI termination circuit

7.3.2 Power supply for terminating resistor

The TERMPWR signal on the interface connector is used to supply power to the terminating resistor circuit connected to both ends of the cable. In a system configuration where the terminating resistor is installed outside the SCSI device or if there is a possibility of the power to the SCSI device with the terminating resistor being cut off, power for the terminating resistor must be supplied to the TERMPWR line from an SCSI device on the bus. The SCSI device always working as an INIT (example: host adapter) should supply that power. Power must be supplied to the TERMPWR line through a diode or other element to prevent reverse current.

Table 7.2 lists the requirements for terminating the resistor power supply (V_{term})

Table 7.2 Requirements for terminating resistor power supply

Item	Single-ended type
Output voltage	4.25 to 5.25 VDC
Current capacity	900 mA min.
Sink current	1.0 mA max.

7.3.3 Signal driving conditions

(1) Signal status value

Table 7.3 shows the correspondence between the input interface signal level at the receiving end and its logic state.

Table 7.3 Signal status

Logic state	Signal level (at receiving end)
	Single-ended type
True, "1", or asserted	Low (0.0 to 0.8 VDC)
False, "0", negated,, or released	High (2.0 to 5.25 VDC)

(2) Signal driving method

Two driving methods are available: "OR-tied" type and "non-OR-tied" type as indicated in Table 7.4.

Table 7.4 Signal driving method

Signal status	Driving method	
	"OR-tied" type	"Non-OR-tied" type
False (*1)	No SCSI device drives a signal. The signal becomes false when the terminating resistor circuit is biased.	A particular SCSI device drives the signal false. Otherwise,, no SCSI device drives the signal.
True	An SCSI device drives the signal true.	

*1 In this manual, the signal is said to be false if one of the following conditions is satisfied.

– The signal is actually driven by an SCSI device to become false (non-OR-tied type).

– No SCSI device is driving the signal (OR-tied type or non-OR-tied type).

In the interface operating sequence, the driving method of the BSY and RST signals which may be driven by two or more SCSI devices simultaneously must be the "OR-tied" type. Signals other than BSY, RST, or DBP are not driven by more than one SCSI device. Signals other than BSY or RST can be driven by either the "OR-tied" type or "non-OR-tied" type. The DBP signal must not be driven false in the ARBITRATION phase. For signals other than BSY or RST, both "OR-tied" and "non-OR-tied" types can be mixed on the SCSI bus.

(3) Signal sources

Table 7.5 lists signal sources for each interface phase.

Table 7.5 Bus phases and signal sources

Bus phase \ Signal	BSY	SEL	I/O	C/D MSG	REQ	ACK	DB7-0, P	ATN	RST
BUS FREE	N	N	N	N	N	N	N	N	A
ARBIRATION	A	W	N	N	N	N	ID	N	A
SELECTION	I&T	I	N	N	N	N	I	I	A
RESELECTION	I&T	T	T	N	N	N	T	I	A
COMMAND	T	N	T	T	T	I	I	I	A
DATA IN	T	N	T	T	T	I	T	I	A
DATA OUT	T	N	T	T	T	I	I	I	A
STATUS	T	N	T	T	T	I	T	I	A
MESSAGE IN	T	N	T	T	T	I	T	I	A
MESSAGE OUT	T	N	T	T	T	I	I	I	A

A: Any SCSI device can drive the signal. Two or more SCSI devices may drive the signal at the same time.

I: Only the SCSI device which operates as an INIT can drive the signal.

I&T: INIT, TARG, or both can drive this signal according to the interface sequence.
In the RESELECTION phase, there is a sequence to be driven simultaneously by both.

ID: Each SCSI device which is actively arbitrating the bus drives a unique data bit (SCSI ID). The parity bit may be undriven or driven to the true state, but must never be driven to the false state.

N: Not to be driven by any SCSI device. The terminator pulls the signal to the false state.

T: Only the SCSI device which operates as an TARG can drive the signal.

W: Only one SCSI device which wins ARBITRATION can drive the signal.

7.4 Timing Rule

Table 7.6 gives the timing required for operations on the SCSI bus.

When [Transfer Period] is less than 200 ns in synchronous data transfer mode, Asserion Period, Cable Skew Delay, Deskew Delay, Hold Time, Negation Period is changed FAST SCSI and used in FAST SCSI timing required fpr operation. (Table 7.7)

Table 7.6 Timing specifications (1 of 3)

No.	Name	Standard	Timing specification
1	Arbitration Delay	2.4 µs min.	The minimum wait period between the time the SCSI device sends a BSY signal and the time the value on the data bus for determining the priority of bus use is judged in the ARBITRATION phase. A maximum time is not defined.
2	Assertion Period	90 ns min.	Minimum pulse width of an ACK signal sent by INIT and an REQ signal sent by TARG for synchronous data transfer.
3	Bus Clear Delay	800 ns max.	Maximum allowable period between the time either of the following events occurs and the time the SCSI device stops driving all bus signals. (1) Detection of the BUS FREE phase (when both BSY and SEL signal become false during Bus Settle Delay). **Note:** Maximum allowable period between the time both BSY and SEL signal became false and the time the bus is released is 1,200 ns. An SCSI device that requires a period longer than Bus Settle Delay for the detection of the BUS FREE phase must release the bus within (Bus Clear Delay) minus (Bus Settle Delay excess time). (2) Another SCSI device asserts the SEL signal during an ARBITRATION phase. (3) The RST signal becomes true (RESET condition).
4	Bus Free Delay	800 ns min.	Minimum wait period between the time the SCSI device detects a BUS FREE phase and the time it sends a BSY signal to initiate an ARBITRATION phase.
5	Bus Set Delay	1.8 µs max.	Maximum allowable period between the time an SCSI device detects a BUS FREE phase and the time it sends BSY and SCSI ID signals to initiate an ARBITRATION phase.

Table 7.6 Timing specifications (2 of 3)

No.	Name	Standard	Timing specification
6	Bus Settle Delay	400 ns min.	Minimum wait period between the time a particular control signal condition changes and the time the bus condition is stabilized.
7	Cable Skew Delay	10 ns max.	Maximum allowable difference in transmission time over the interface cable between any two bus signals from any two SCSI devices.
8	Data release Delay	400 ns max.	Maximum allowable period between the time an I/O signal changes its status from false to true and the time the INIT stops driving data bus signals.
9	Deskew Delay	45 ns min.	Time for compensation for skew involved in bus signal transmission.
10	Hold Time	45 ns min.	In synchronous data transfer mode, the minimum time during which the transfer data on the DATA BUS from the leading edge of the REQ or ACK signal pulse must be maintained to compensate for the hold time in the SCSI device receiving data.
11	Negation Period	90 ns min.	In synchronous data transfer mode, the minimum time from the trailing edge of an REQ signal to the leading edge of the next REQ signal,, or from the trailing edge of an ACK signal to the leading edge of the next ACK signal.
12	Power-On to Selection Time	10 sec max.	Maximum time from when the TARG is turned on to the time the TARG can post the correct status and sense data for the TEST UNIT READY, INQUIRY or REQUEST SENSE command.
13	Reset to Selection Time	250 ms max.	Maximum time from when the RESET condition (hard RESET) is released to the time the TARG can post the correct status and sense data for the TEST UNIT READY,, INQUIRY or REQUEST SENSE command.
14	Reset Hold Time	25µs min.	The minimum time during which the RST signal must be held true to create a RESET condition. A maximum time is not defined.
15	Selection Abort Time	200µs max.	In a SELECTION or RESELECTION phase,, the maximum allowable period between the time the SCSI device recognizes itself as selected and the time it replies with a BSY signal.
16	Selection Timeout Delay	250 ms min. [Recommended value]	In a SELECTION or RESELECTION phase,, the minimum time during which the INIT or TARG waits for a BSY signal from the SCSI device to be selected before it initiates timeout processing.

Table 7.6 Timing specifications (3 of 3)

No.	Name	Standard	Timing specification
17	Transfer Period	–	In synchronous data transfer mode, the minimum time (minimum repetition time) from the leading edge of an REQ signal to the leading edge of the next REQ signal or from the leading edge of an ACK signal to the leading edge of the next ACK signal. The actual value is defined using a SYNCHRONOUS DATA TRANSFER REQUEST message exchanged between the INIT and TARG.

Table 7.7 FAST SCSI Timing specifications

No.	Name	Standard	Timing specification
18	Fast Assertion Period	30 ns min.	In FAST SCSI data transfer mode, minimum pulse width of an ACK signal sent by INIT and an REQ signal sent by TARG for synchronous data transfer.
19	Fast Cable Skew Delay	5 ns max.	In FAST SCSI data transfer mode, maximum allowable difference in transmission time over the interface cable between any two bus signals from any two SCSI devices.
20	Fast Deskew Delay	20 ns min.	In FAST SCSI data transfer mode, time for compensation for skew involved in bus signal transmission.
21	Fast Hold Time	10 ns min.	In FAST SCSI data transfer mode, the minimum time during which the transfer data on the DATA BUS from the leading edge of the REQ or ACK signal pulse must be maintained to compensate for the hold time in the SCSI device receiving data.
22	Fast Negation Period	30 ns min.	In FAST SCSI data transfer mode, the minimum time from the trailing edge of an REQ signal to the leading edge of the next REQ signal,, or from the trailing edge of an ACK signal to the leading edge of the next ACK signal.

7.5 Bus Phases

The SCSI bus must be in one of the follwing eight phases:

- BUS FREE phase
- ARBITRATION phase
- SELECTION phase
- COMMAND phase
- DATA phase
- STATUS phase
- MESSAGE phase

(COMMAND, DATA, STATUS and MESSAGE phases: INFORMATION TRANSFER phase)

The SCSI bus can never be in more than one phase at any given time.

Note:

In the following bus phase definition, signals are false unless otherwise defined. Signals on the timing charts are assumed to be positive logic.

7.5.1 BUS FREE phase

No SCSI device uses the bus during a BUS FREE phase. SCSI devices shall detect the BUS FREE phase after SEL and BSY signals are both false for at least 400 ns (Bus Settle Delay).

SCSI devices which have detected the BUS FREE phase shall release all bus signals within 800 ns (Bus Clear Delay) after BSY and SEL become false for a Bus Settle Delay. If an SCSI device requires more than 400 ns (Bus Settle Delay) to detect the BUS FREE phase, it shall release all bus signals within the following period (t):

t = 800 ns (Bus Clear Delay) – (Period required for BUS FREE phase detection)
+ 400 ns (Bus Settle Delay)

The maximum time allowed for releasing the bus after both SEL and BSY becomes false is 1.2 µs.

Figure 7.5 shows the BUS FREE phase.

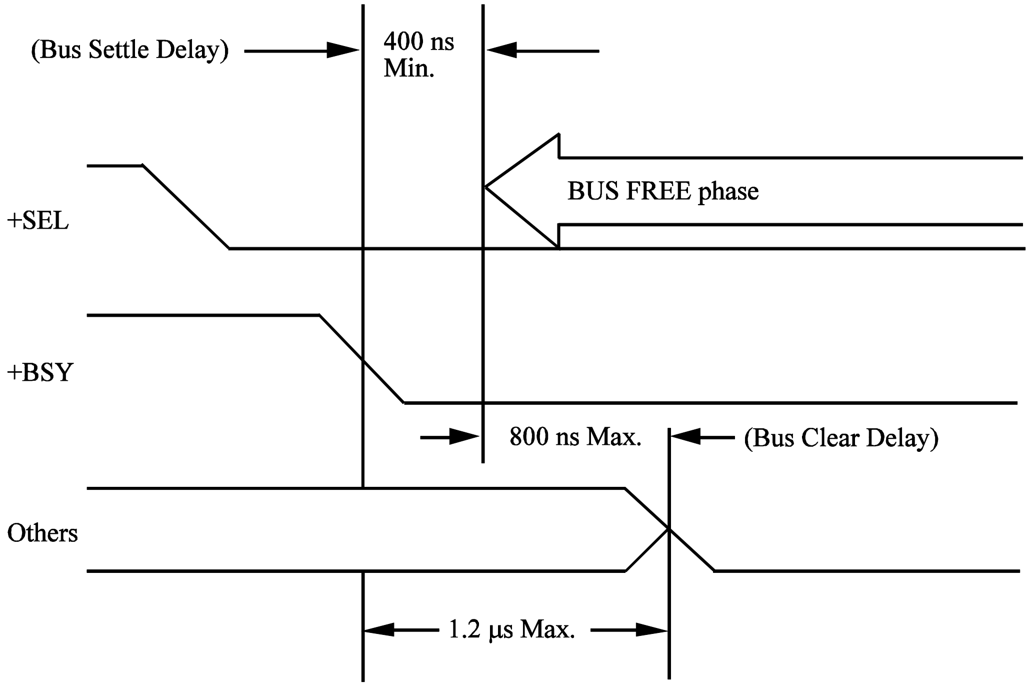

Figure 7.5 BUS FREE phase

Transition to a BUS FREE phase occurs when the TARG stops the BSY signal in one of the following events:

- When the RESET condition has been detected
- When the TARG has received ABORT message
- When the TARG has received a BUS DEVICE RESET message
- When the TARG has sent a DISCONNECT message normally
- When the TARG has sent a COMMAND COMPLETE message normally

If a SELECTION or RESELECTION phase is terminated unsuccessfully, the SCSI bus enters a BUS FREE phase. This BUS FREE phase is generated when the SEL signal becomes false.

In cases other than the above, if the TARG negates the BSY signal to enter a BUS FREE phase, the TARG informs the INIT that it has detected an ERROR condition on the SCSI bus. The TARG can enter a BUS FREE phase forcedly regardless of the ATN signal status; the INIT must treat that phase transition as indicating abnormal end of a command. The TARG clears all retained data or status and terminates the command being executed. It can then create sense data indicating the detailed error condition. If the INIT detects a BUS FREE phase when it is not expected, it should issue a REQUEST SENSE command to read the sense data.

7.5.2 ARBITRATION phase

The ARBITRATION phase allows one SCSI device to gain control of the SCSI bus so that an INIT starts the SELECTION phase or a TARG starts the RESELECTION phase.

Implementation of the ARBITRATION phase is a system option. This phase is required for system that has two or more INITs or uses the RESELECTION phase. The procedure to obtain control of the SCSI bus is as follows (see Figure 7.6):

1) The SCSI device shall wait for a BUS FREE phase (see Subsection 7.5.1).

2) The SCSI device shall wait at least 800 ns (Bus Free Delay) after Bus Free phase detection.

3) Then the SCSI device that arbitrates the bus asserts the DATA BUS bit corresponding to its own SCSI ID and BSY signal within 1.8 µs (Bus Set Delay) after last observation of the BUS FREE phase (*1).

4) After waiting at least 2.4 µs (Arbitration Delay) since the SCSI device asserted the BSY signal, the SCSI device shall examine the value on the DATA BUS to determine the priority of the bus arbitration. (The priority of the bus arbitration is in the descending order of data bus bit numbers; the highest priority is DB7 (ID#7) and the lowest priority is DB0 (ID#0)).

   - When the SCSI device detects any ID bit which is assigned higher priority than its own SCSI ID, the SCSI device shall release its signals (BSY and its SCSI ID), then may return to step 1). (The SCSI device #1 in Figure 7.6 has lost the arbitration.)

   - The SCSI device which detects no higher SCSI ID bit on the DATA BUS can obtain the bus control, then it shall assert SEL signal. (The SCSI device #7 in Figure 7.6 has won the arbitration.)

   - Any other SCSI device that is participating in the ARBITRATION phase shall release its signals within 800 ns (Bus Clear Delay) after the SEL signal becomes true, then may return to step 1). (The SCSI device #3 in Figure 7.6 has lost the arbitration.)

5) The SCSI device which wins arbitration (SCSI device #7 in Figure 7.6) shall wait at least 1.2 µs (Bus Clear Delay + Bus Settle Delay) after asserting the SEL signal before changing any signal state.

*1: When an SCSI device sends its SCSI ID to the DATA BUS, it asserts only the bit at the position corresponding to its own ID and leaves the other seven bits false. The parity bit (DBP signal) is not driven or is driven true, rather than false. The parity bit on the DATA BUS is unpredictable during an ARBITRATION phase.

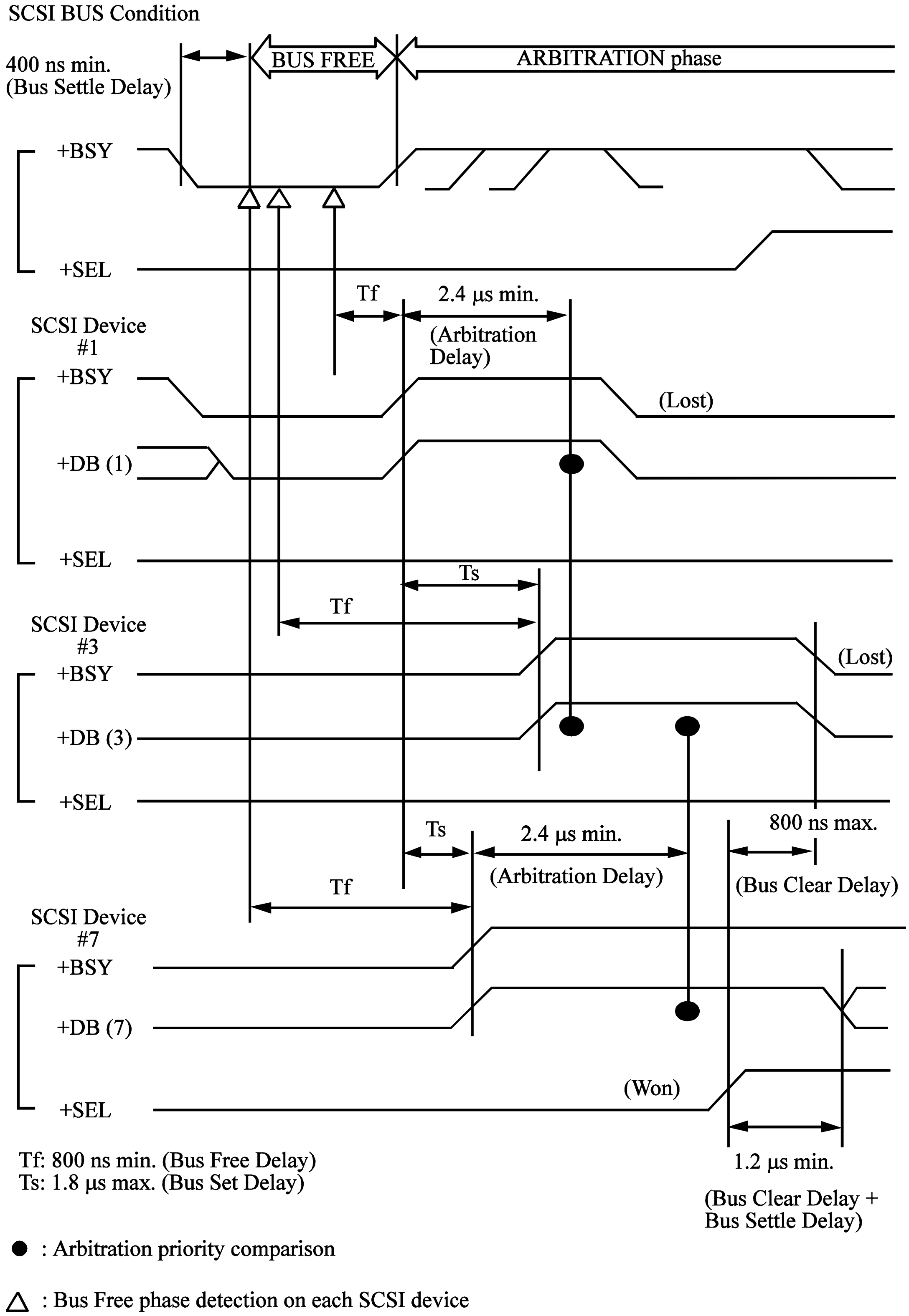

Figure 7.6 ARBITRATION phase

7.5.3 SELECTION phase

An INIT can select a TARG in the SELECTION phase.

Note:

I/O signal is false during a SELECTION phase. (The I/O signal identifies the phase as SELECTION or RESELECTION).

(1) Start sequence without ARBITRATION phase

In systems with the ARBITRATION phase not implemented, the INIT starts the SELECTION phase in the following sequence (See Figure 7.7).

1) The INIT shall wait for at least 800 ns (Bus Clear Delay) after BUS FREE phase detection.

2) The INIT then asserts its SCSI ID and that of the desired TARG on the data bus.

3) After waiting at least 90 ns (Deskew Delay $\times$ 2), the INIT asserts the SEL signal and waits for a response from the TARG (BSY signal).

(2) Start sequence with ARBITRATION phase

In systems with ARBITRATION phase implemented, the INIT starts the SELECTION phase in the following sequence (See Figure 7.7).

1) The INIT shall wait for at least 1.2 µs (Bus Clear Delay + Bus Settle Delay) after turning SEL signal on during the ARBITRATION phase.

2) The INIT then asserts its SCSI ID and that of the desired TARG on the data bus.
At this time, the SCSI device becomes an INIT without driving the I/O signal.

3) The INIT releases the BSY signal after waiting at least 90 ns (Deskew Delay $\times$ 2). The INIT shall then wait at least 400 ns (Bus Settle Delay) before looking for the response from the TARG (BSY signal).

(3) Response sequence

When the SCSI device (TARG) detects that the SEL signal and the data bus bit (DBn) corresponding to its SCSI ID are true and the BSY and I/O signals are false for more than 400ns (Bus Settle Delay), it must recognize that itself is selected by the SELECTION phase. At this time, the selected TARG may sample all bits on the data bus to identify the INIT's SCSI ID.

The TARG must respond to the INIT by making the BSY signal true within 200µs (Selection Abort Time) after detecting that itself is selected. If the SCSI ID with three or more bits is detected on the data bus or a parity error is detected in the system making the data bus parity bit effective, the TARG must respond to the SELECTION phase.

The values on the DATA BUS can be changed after this time.

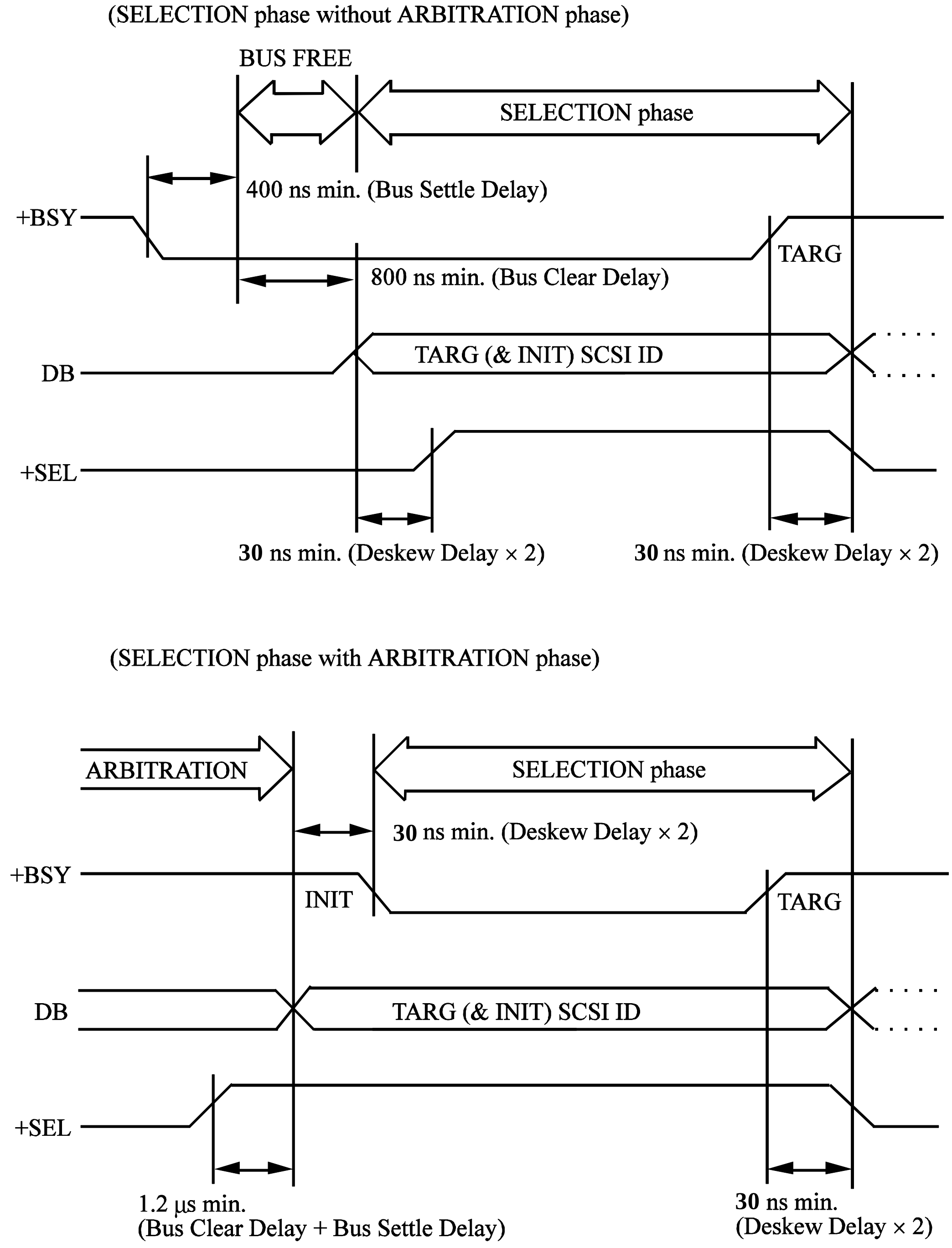

Figure 7.7 SELECTION phase

(4) Timeout procedure

If the INIT cannot detect the response from TARG when the Selection Timeout Dalay (or longer) has passed after starting the SELECTION phase, the timeout procedure shall be performed through one of the following schemes:

- The INIT asserts the RST signal and creates the RESET condition.

- The INIT maintains SEL signal true and releases the data bus (SCSI IDs). Subsequently, the INIT waits for the response from TARG for at least 200 µs (Selection About Time) + 90 ns (Deskew Delay × 2). If no response is detected, the INIT releases the SEL signal allowing the SCSI bus to go to the BUS FREE phase. If the INIT detects the response from TARG during this period, the INIT considers the SELECTION phase to have completed normally.

7.5.4 RESELECTION phase

The TARG selects an INIT during the RESELECTION phase. The RESELECTION phase can only be used in systems with ARBITRATION phase implemented.

The TARG reconnects the INIT using this RESELECTION phase when the TARG restarts the command processing that is in the disconnect state on the SCSI bus.

(1) Start sequence

A TARG performs the RESELECTION phase in the following sequence after obtaining control of the SCSI bus through the ARBITRATION phase:

1) The TARG waits at least 1.2 µs (Bus Clear Delay + Bus Settle Delay) after asserting the SEL signal.

2) The TARG sends the SCSI ID of TARG itself and INIT and asserts the I/O signal. (The TARG can obtain control of the SCSI bus by asserting the I/O signal.)

3) The TARG releases the BSY signal after waiting at least 90 ns (Deskew Delay × 2), then wait at least 400 ns (Bus Settle Delay) before looking for the response from the INIT (BSY signal).

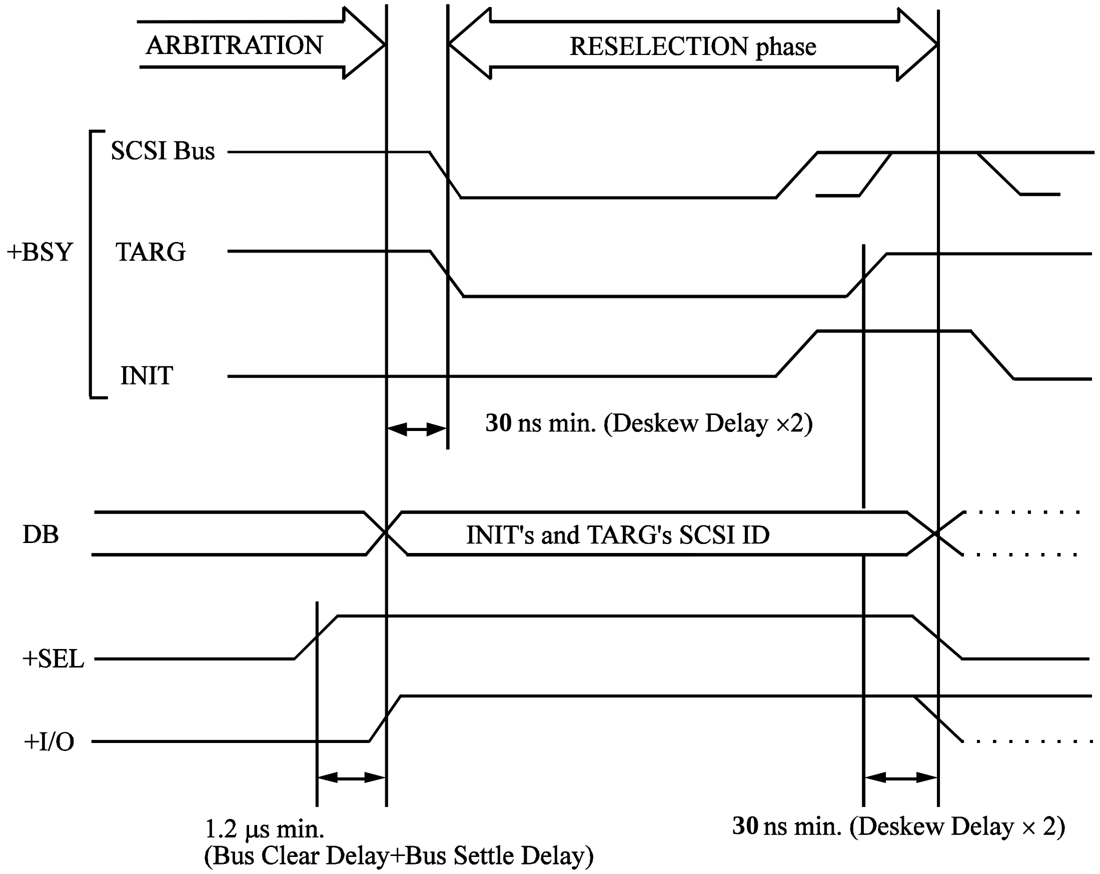

Figure 7.8 RESELECTION phase

(2) Response sequence

When the SCSI device (INIT) detects that the SEL signal, I/O signal and data bus bit (DBn) corresponding to the own SCSI ID are true and the BSY signal is false for 400 ns (Bus Settle Delay) or more, the INIT shall recognize that the INIT itself is selected in the RESELECTION phase. At this time, the selected INIT performs sampling to identify the SCSI ID of the TARG that requests the reconnection.

The INIT shall respond to the TARG by asserting the BSY signal within 200 µs (Selection Abort Time).

When other than 2-bit SCSI ID is detected or when the parity error is detected on the system in which the parity bit of the data bus is valid, the INIT shall not respond to the RESELECTION phase.

After the TARG detects the response (BSY signal) from the INIT, the TARG asserts the BSY signal, then release the SEL signal after 90 ns (Deskew Delay × 2) or more. After this time, the TARG may change the I/O signal state and data bus value.

When the INIT detects that the SEL signal is false, the INIT stops sending the BSY signal.

(3) Timeout procedure

If the TARG cannot detect a response from the INIT when the Selection Timeout Delay (recommended: 250 ms) or longer has passed in the RESELECTION phase, the timeout procedure shall be performed though one of the following schemes:

1) The INIT asserts the RST signal to generate the RESET condition.

2) TARG terminates releasing SCSI ID to DATA BUS with maintaining SEL signal and I/O signal in TRUE status. Subsequently, the INIT waits for the response from TARG for at least 200 µs (Selection Abort Time) + 90 ns (Deskew Delay × 2). If no response is detected, the INIT releases the SEL signal allowing the SCSI bus to go to the BUS FREE phase. If the INIT detects the reponse from TARG during this period, the INIT considers the SELECTION phase to have completed normally.

The ODD performs process 2) above as RESELECTION-phase time-out processing.

7.5.5 INFORMATION TRANSFER phases

COMMAND, DATA, STATUS, and MESSAGE phases are generally called INFORMATION TRANSFER phases. In these phases, data and control information are transferred between the INIT and the TARG through the data bus.

The type of INFORMATION TRANSFER phase is determined by the combination of C/D, I/O, and MSG signals (see Table 7.1). Since these three signals are specified by the TARG, phase transition is controlled by the SCSI device operating as a TARG. The INIT can request the TARG to initiate an MESSAGE OUT phase by sending an ATN signal. Besides, the TARG can change the bus phase to BUS FREE by ceasing transmission of the BSY signal.

Information transfer in an INFORMATION TRANSFER phase is controlled by REQ and ACK signals. The REQ signal is sent by the TARG to request data transfer, and the ACK signal is a response from the INIT. One pair of REQ and ACK signals causes one byte of information to be transferred. According to the method of sending an REQ signal and checking the replied ACK signal (REQ/ACK handshake), two data transfer modes are defined: synchronous and asynchronous.

During operation in an INFORMATION TRANSFER phase, the BSY signal must be kept true by the TARG. The SEL signal must be false. The TARG must establish the status of three signals C/D, I/O, and MSG which specify the phase type at least 400 ns (Bus Settle Delay) before the leading edge of the REQ signal which requests transfer of the first byte. The TARG must maintain that status until the trailing edge of the ACK signal corresponding to the last byte in the phase (see Figure 7.9).

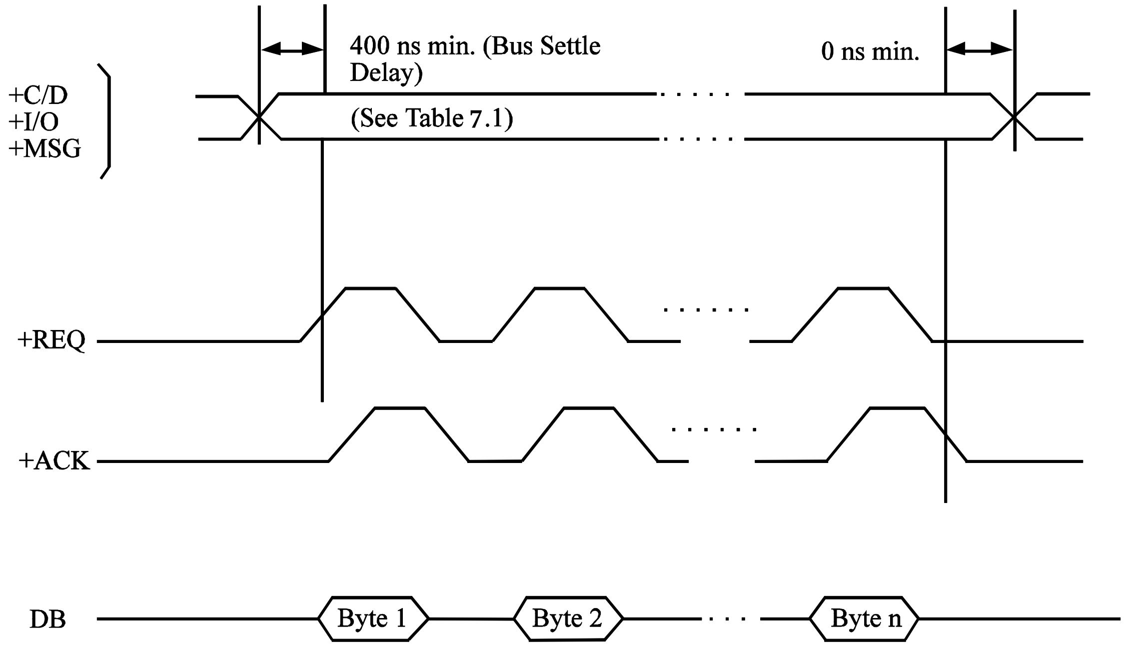

Figure 7.9 INFORMATION TRANSFER phase (phase control)

<u>IMPORTANT</u>

1. *After the ACK signal becomes false during the INFORMATION TRANSFER phase, the TARG can begin to prepare for a new phase by changing the status of C/D, I/O, and MSG signals. The status of these three signals can change in any order or at once. The status of one signal may change more than once; however, the TARG should change the status of each signal only once.*

2. *Note that a new INFORMATION TRANSFER phase starts when the REQ signal that requests transfer of the first byte in the phase becomes true. The phase ends when one of C/D, I/O, or MSG signal changes after the ACK signal becomes false. The period between the time one phase ends and the time the REQ signal to initiate the next new phase becomes true is not defined.*

3. *The INIT can predict the next new phase (expected phase) from the status change of C/D, I/O, and MSG signals or from the type of the preceding execution phase executed. However, note that the expected phase does not come into effect until the REQ signal becomes true.*

(1) Asynchronous transfer

In asynchronous transfer mode, information transfer is controlled by the INIT and TARG which are checking the status transition (from false to true and vice versa) of REQ and ACK signals (interlock type). Asynchronous transfer can be used in all types of INFORMATION TRANSFER phase (COMMAND, DATA, STATUS, MESSAGE). Figure 7.10 shows the timing rule of the asynchronous transfer.

a. Transfer from TARG to INIT

The TARG specifies the information transfer direction by the I/O signal. If the I/O signal is true, the information on the DATA BUS is transferred from the TARG to the INIT. Information transfer processing is as follows:

1) The TARG asserts the REQ signal at least 55 ns (Deskew Delay + Cable Skew Delay) after sending valid information on the data bus (DB7 to DB0, P). It must maintain the state of DB7 to DB0, P until the ACK signal becomes true on the TARG.

2) INIT fetches the data from the data bus (DB7 to DB0, P) after the REQ signal becomes true. It asserts the ACK signal to report the completion of reception.

3) After the ACK signal becomes true on the TARG, the TARG negates the REQ signal. Thereafter, the TARG can change the data of the data bus.

4) The INIT negates the ACK signal after the REQ signal becomes false.

5) After the ACK signal becomes false, the TARG proceeds to transfer the next byte.

b. Transfer from INIT to TARG

When the I/O signal is false, information on the data bus is transferred from the INIT to the TARG. Information transfer processing is as follows.

1) The TARG asserts the REQ signal to request the INIT to send information.

2) The INIT asserts the ACK signal at least 55 ns (Deskew Delay + Cable Skew Delay) after sending valid information of the requested type on the data bus (DB7 to DB0, P). The information on the DATA BUS must be maintained until the REQ signal becomes false on the INIT.

3) The TARG fetches data from the data bus (DB7 to DB0, P) after the ACK signal becomes true and negates the REQ signal to report the completion of reception.

4) When the REQ signal becomes false on the INIT, the INIT negates the ACK signal. After that, the INIT can change data on the data bus.

5) The TARG proceeds to the transfer of the next byte after the ACK signal becomes false.

Timing rule for REQ and ACK signals

Note: Time is defined on SCSI connector pins on the ODD.

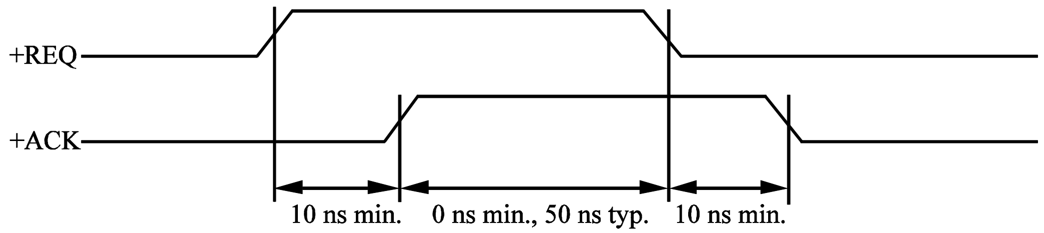

Transfer from TARG to INIT

Note: Time is defined on SCSI connector pins on the TARG.

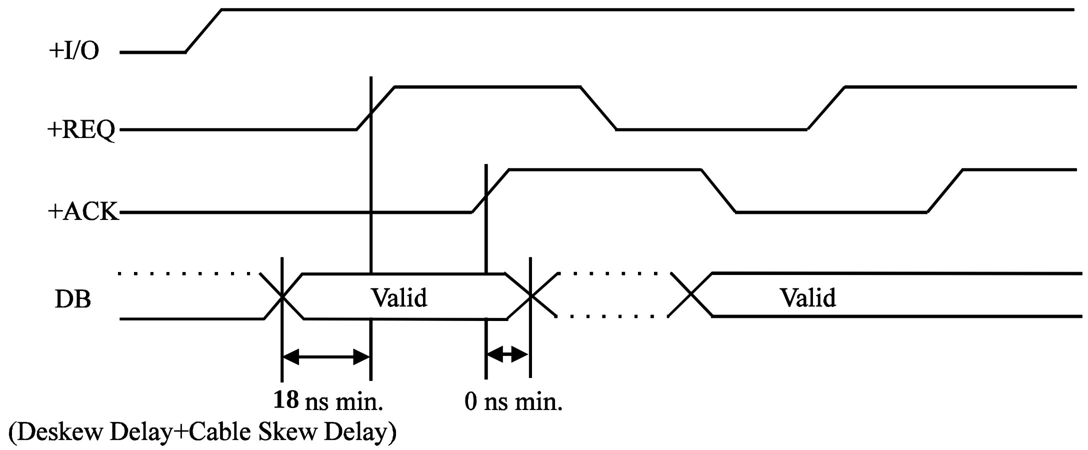

Transfer from INIT to TARG

Note: Time is defined on SCSI connector pins on the INIT.

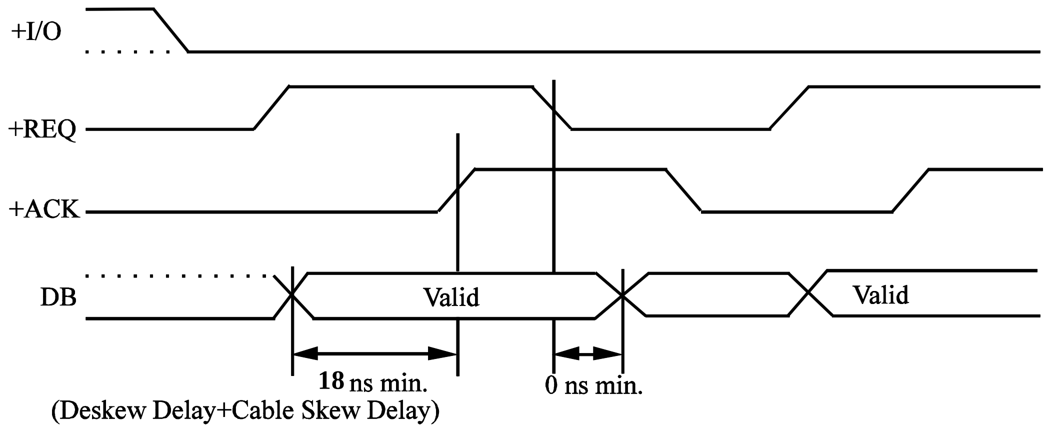

Figure 7.10 Transfer in asynchronous mode

(2) Synchronous mode

Information is transferred through offset-interlock of REQ/ACK handshake. Operation in this mode is only available for the DATA phase.

IMPORTANT

The default data transfer mode is asynchronous mode. When power is first switched on, a RESET condition develops or a BUS DEVICE RESET message is exchanged, data transfer is performed in asynchronous mode until the message described below is exchanged, even if synchronous mode transfer is permitted with the setting terminal.

Before synchronous mode transfer can be used, a SYNCHRONOUS DATA TRANSFER REQUEST message must be exchanged between the INIT and TARG to define synchronous mode transfer between them. Then, the following transfer parameters are determined to define a range of possible transfer rates between the SCSI devices.

- REQ/ACK Offset: Number of REQ signals that the TARG can send before receiving the ACK signal.

- Transfer Period: Minimum repetition cycle of REQ and ACK signals.

The TARG can send more than one REQ pulse before receiving the ACK pulse from the INIT if the number of REQ pulses is within the range defined by the REQ/ACK Offset parameter. When the difference between the number of REQ pulses sent by the TARG and the number of ACK pulses received by the TARG reaches the number assigned to the REQ/ACK Offset parameter, the TARG must not send an REQ pulse until it receives the leading edge of the next ACK pulse. For normal termination of transfer in a DATA phase, the number of REQ pulses and the number of ACK pulses must be equal.

The TARG must satisfy the following timing requirements concerning the transmission of the REQ signal at the connector pin on the TARG:

- The minimum pulse width is 90 ns (Assertion Period) [30 ns (Fast Assertion Period) in FAST SCSI mode].

- The minimum period from the trailing edge of a pulse to the leading edge of the next pulse is 90 ns (Negation Period) [30 ns (Fast Negation Period) in FAST SCSI mode].

- The period between the leading edges of a pulse and the next pulse is equal to or greater than the time defined by the Transfer Period parameter.

The INIT must respond to the TARG by sending as the same number of ACK pulses as the REQ pulses received from the TARG. It can send an ACK signal when it receives the leading edge of the corresponding REQ signal. The INIT must satisfy the following timing requirements concerning the transmission of the ACK signal at the SCSI connector pin on the INIT:

- The minimum pulse width is 90 ns (Assertion Period) [30 ns (Fast Assertion Period) in FAST SCSI mode].

- The minimum period between the trailing edge of a pulse and the leading edge of the next pulse is 90 ns (Negation Period) [30 ns (Fast Negation Period) in FAST SCSI mode].

- The period between the leading edges of a pulse and the next pulse is equal to or greater than the time defined by the Transfer Period parameter.

Figure 7.11 shows the timing rule of the synchronous mode.

a. Transfer from TARG to INIT

The TARG specifies the data transfer direction by the I/O signal. If the I/O signal is true, data is transferred from the TARG to the INIT. Transfer processing is as follows:

1) The TARG sends an REQ pulse at least 55 ns (Deskew Delay + Cable Skew Delay) [at least 25 ns (Fast Deskew Delay + Fast Cable Skew Delay) in FAST SCSI mode]after sending valid data on the data bus (DB7 to DB0, P).

2) The data on the data bus must be held valid for at least 100 ns (Deskew Delay + Cable Skew Delay) [at least 35 ns (Fast Deskew Delay + Fast Cable Skew Delay) in FAST SCSI mode after the leading edge of the REQ pulse. The pulse width of the REQ signal sent by the TARG must be at least 90 ns (Assertion Period) [at least 30 ns (Fast Assertion Period) in FAST SCSI mode.

3) After compensating for the period defined in 2, the TARG transfers subsequent data in bytes within the range defined by the REQ/ACK Offset parameter.

4) The INIT receives the data on the data bus (DB7 to DB0, P) within 45 ns (Hold Time) [within 10 ns (Fast Hold Time) in FAST SCSI mode] after the leading edge of the received REQ pulse and sends an ACK pulse to report the completion of reception.

b. Transfer from INIT to TARG

If the I/O signal is false, data is transferred from the INIT to the TARG. Transfer processing is as follows:

1) TARG sends REQ pulses to request data transfer within the range defined by the REQ/ACK Offset parameter.

2) The INIT transfers one byte of data in response to each REQ pulse received from the TARG. The INIT sends valid data on the DATA BUS (DB7 to DB0, P) after receiving the leading edge of the REQ pulse, then sends an ACK pulse at least 55 ns (Deskew Delay + Cable Skew Delay) [at least 25 ns (Fast Deskew Delay + Fast Cable Skew Delay) in FAST SCSI mode] later.

3) The INIT must hold the data bus valid for at least 100 ns (Deskew Delay + Cable Skew Delay + Hold Time) [at least 35 ns (Fast Deskew Delay + Fast Cable Skew Delay + Fast Hold Time) FAST SCSI mode] in from the leading edge of the ACK pulse. The INIT sends an ACK signal with a pulse width of at least 90 ns (Assertion Period) [at least 30 ns (Fast Assertion Period) in FAST SCSI mode].

4) The TARG fetches data from the data bus within 45 ns (Hold Time) [within 10 ns (Fast Hold Time) in FAST SCSI mode] after the leading edge of the received ACK pulse.

(3) Time monitoring of ACK response wait

When the ODD operates as a TARG, wait time for ACK response to REQ can be monitored.

Timing rule for REQ and ACK signals

Note: Time is defined on SCSI device connector pins on the signal sending side.

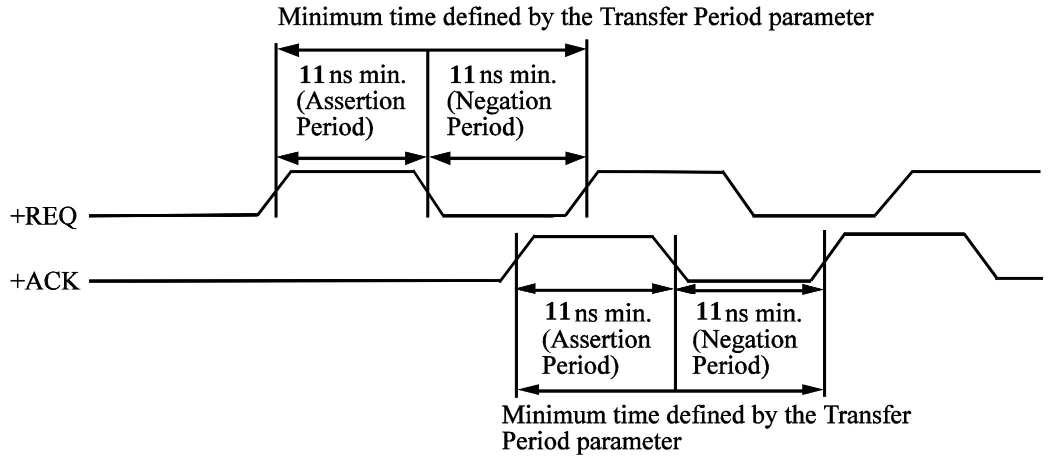

Transfer from TARG to INIT

Note: Time is defined on SCSI device connector pins on the TARG.

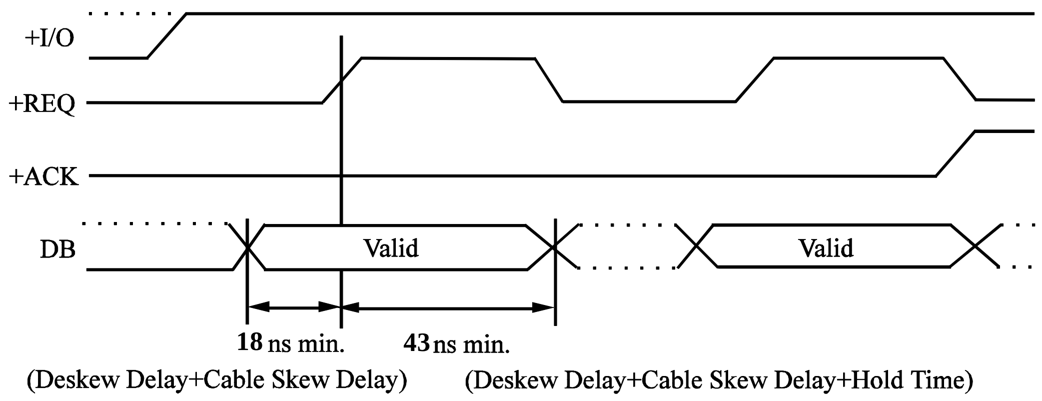

Transfer from INIT to TARG

Note: Time is defined on SCSI device connector pins on the INIT.

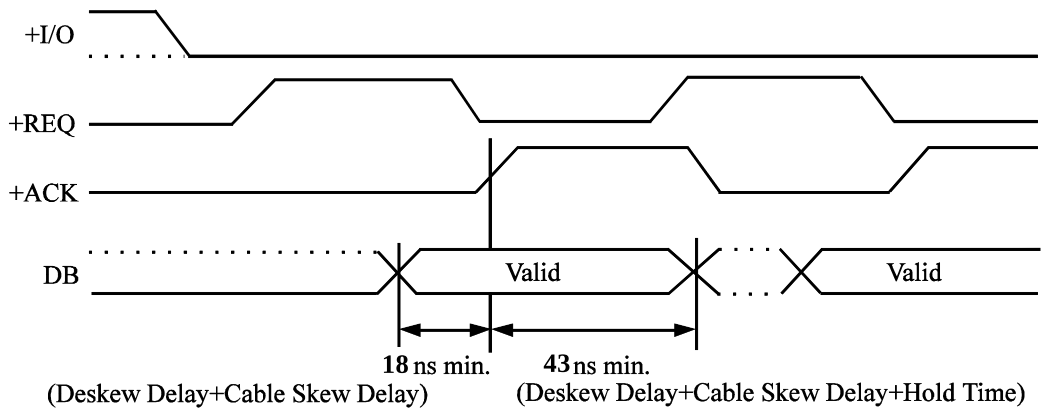

Figure 7.11 Transfer in synchronous mode

Timing rule for REQ and ACK signals (Fast SCSI)

Note: Time is defined on SCSI device connector pins on the signal sending side.

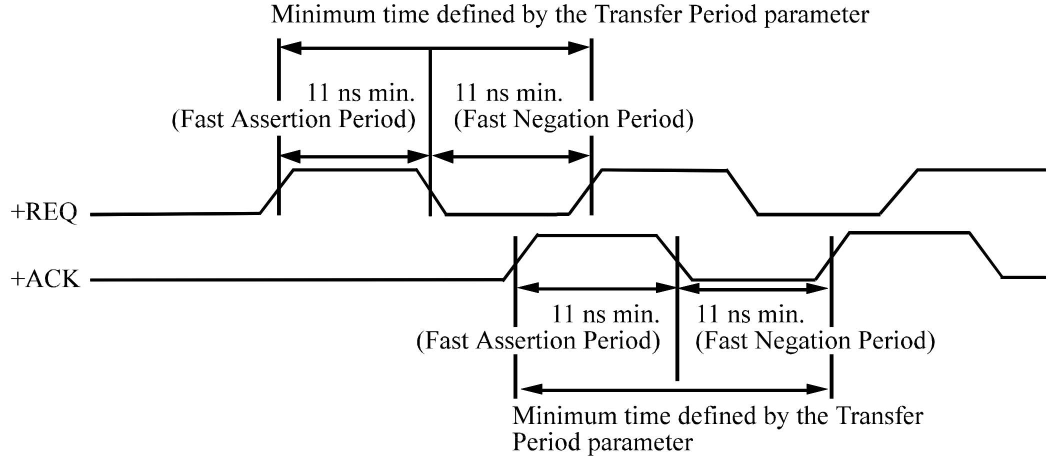

Transfer from TARG to INIT

Note: Time is defined on SCSI device connector pins on the TARG.

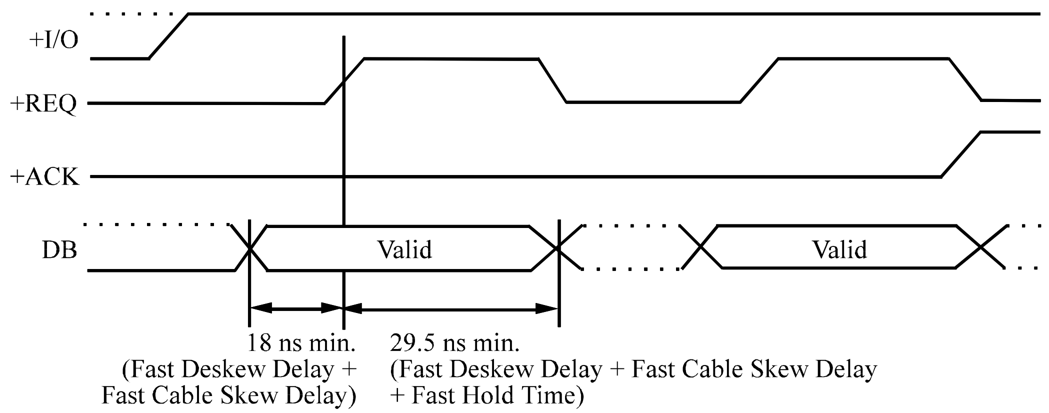

Transfer from INIT to TARG

Note: Time is defined on SCSI device connector pins on the INIT.

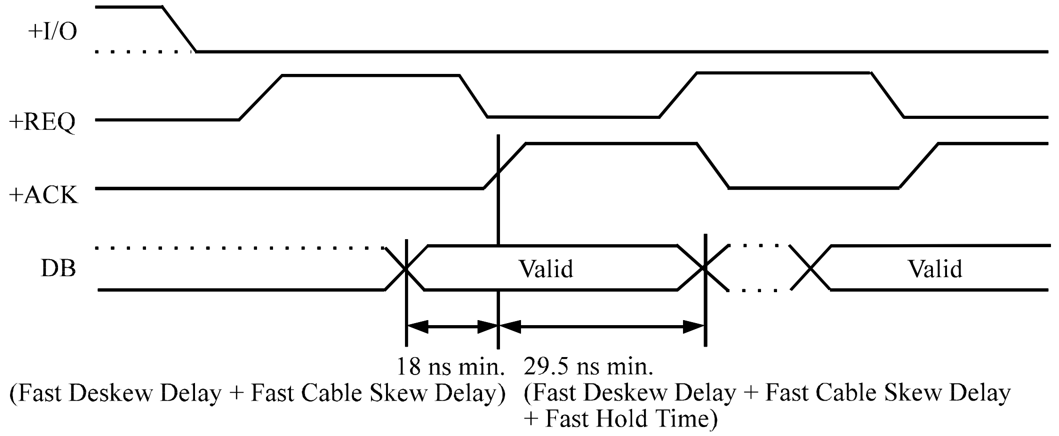

Figure 7.12 Transfer in FAST SCSI mode

7.5.6 COMMAND phase

The COMMAND phase is a bus phase in which the TARG requests the INIT to transfer command information (CDB) to the TARG. The TARG keeps the C/D signal true and the I/O and MSG signals false during REQ/ACK handshaking in this phase.

7.5.7 DATA phase

The DATA phase is divided into DATA IN and DATA OUT phases according to the direction of data transfer. In a DATA phase, synchronous data transfer can be performed.

(1) DATA IN phase

In a DATA IN phase, the TARG requests to transfer data from the TARG to the INIT. The TARG keeps the I/O signal true and the C/D and MSG signals false during REQ/ACK handshaking in this phase.

(2) DATA OUT phase

In a DATA OUT phase, the TARG requests to transfer data from the INIT to the TARG. The TARG keeps the C/D, I/O, and MSG signals false during REQ/ACK handshaking in this phase.

(3) Data transfer rate in asynchronous mode

Figure 7.13 shows the REQ/ACK handshake timing that the ODD observes in a DATA phase where asynchronous transfer is used. The data transfer rate on the SCSI bus depends on sum of the ACK response time in the INIT and the signal delay time of the interface cable (T1 and T2 in Figure 7.13).

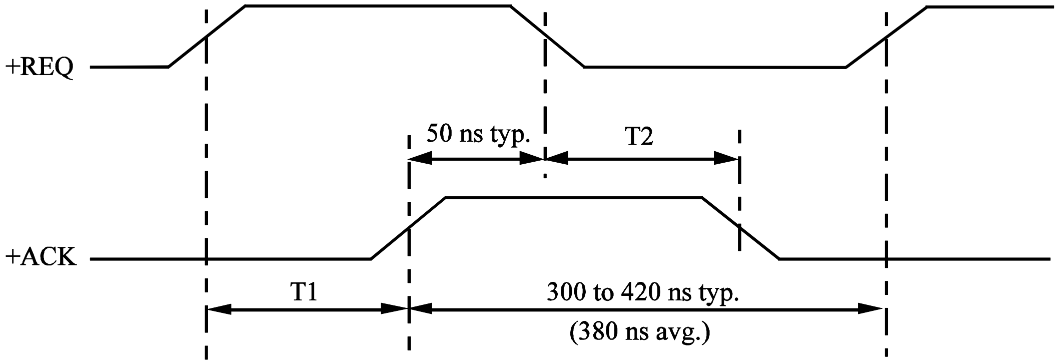

Note:

The time is determined by the corresponding pin of the SCSI connector on the ODD.

Cable length (m)	1	3	6
Average transfer rate (MB/s)	2.02	1.90	1.75

- The signal delay time over the cable is assumed to be 15 ns/m, including forward and backward travel.
- The delay from the REQ reception to the ACK response in the INIT is assumed to be 100 ns.
- Interval T2 in the figure is assumed to be 260 ns.

Figure 7.13 Data transfer rate in asynchronous mode

(4) Data transfer rate in synchronous mode

Table 7.8 lists parameters for synchronous data transfer that can be performed by the ODD. Values assigned to these parameters are determined by SYNCHRONOUS DATA TRANSFER REQUEST messages transferred between the INIT and TARG. In a system with more than one INIT, parameters may vary from one INIT to another. The data transfer rate is determined by the value assigned to the Transfer Period parameter. To maintain this transfer rate, however, an appropriate value must be assigned to the REQ/ACK Offset parameter considering the INIT's ACK pulse response performance and the interface cable length.

The formulas below give the approximate average data transfer rate that can be achieved on the SCSI bus in synchronous mode. (See Figure 7.14.) The notation used in the formulas is as follows:

1) If $(n \times T1) \geq (T2 + 700)$,

Average data transfer rate in SCSI = 1000/T1 (MB/s)

2) If $(n \times T1) > (T2 + 700)$,

Average data transfer rate in SCSI = $(n \times 1000)/(T2 + 700)$ (MB/s)

where,

n: Value assigned to REQ/ACK Offset parameter

T1: Value in ns assigned to Transfer Period parameter (see Table 7.8)

T2: Average time in ns from REQi pulse transmission to corresponding ACKi response at the pertinent pins of the SCSI connector on the ODD

Table 7.8 Parameters used for synchronous data transfer

Parameter	Value		Transter rate	
REQ/ACK Offset	1 to 16			
Transfer Period (Minimum REQ Interval sent from ODD) (T1 in Figure 7.17)	X '0C'	(50 ns)	Max.	20.0 MB/s*1
	X '12'	(75 ns)	Max.	13.3 MB/s*1
	X '19'	(100 ns)	Max.	10.0 MB/s*1
	X '25'	(150 ns)	Max.	6.6 MB/s*1
	X '32'	(200 ns)	Max.	5.0 MB/s*1
	X '3E'	(250 ns)	Max.	4.0 MB/s*1
	X '4B'	(300 ns)	Max.	3.3 MB/s*1

*1. If a single-ended SCSI bus is used, the maximum transfer rate must be specified considering the bus configuration, the number of connected SCSI devices, and transmission characteristics.

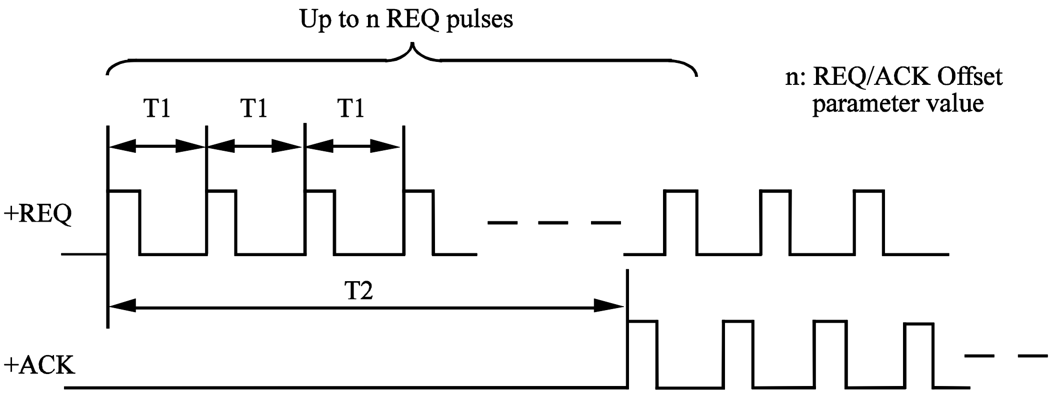

Figure 7.14 Data transfer rate in synchronous mode

7.5.8 STATUS phase

In a STATUS phase, the TARG requests to transfer status information from the TARG to the INIT. The TARG keeps the C/D and I/O signals true and the MSG signal false during REQ/ACK handshaking in this phase.

7.5.9 MESSAGE phase

The MESSAGE phase is divided into MESSAGE IN and MESSAGE OUT phases depending on the direction of message information transfer. In either phase, more than one message can be transferred. The first byte transferred in a MESSAGE phase must be a single-byte message or the first byte of a multiple-byte message. If the message consists of more than one byte, all bytes must be transferred in a single MESSAGE phase. For details of message types and their operation, see Chapter 5.

(1) MESSAGE IN phase

In a MESSAGE IN phase, the TARG requests to transfer message information from the TARG to the INIT. The TARG keeps the C/D, I/O, and MSG signals true during REQ/ACK handshaking in this phase.

(2) MESSAGE OUT phase

In a MESSAGE OUT phase, the TARG requests to transfer message information from the INIT to the TARG. The TARG keeps the C/D and MSG signals true and I/O signal false during REQ/ACK handshaking in this phase.

The TARG executes this phase in response to the ATTENTION condition (described in Subsection 7.6.1) created by the INIT, and must remain in the MESSAGE OUT phase.

Note:

When the TARG returns a MESSAGE REJECT message to reject an invalid or incorrect message or when the TARG enters a BUS FREE phase as directed by a received message or returns a message (SYNCHRONOUS DATA TRANSFER REQUEST message, for example) in a prompt response to a received message, it can terminate the MESSAGE OUT phase regardless of whether the ATN signal is true or false.

When the TARG detects a parity error in the received message information, the TARG can request the INIT to retry message transmission by sending a REQ signal after sensing the ATN signal false without having to change the bus phase (that is, while remaining in the MESSAGE OUT phase). Upon receiving this REQ signal, the INIT must retransmit all of the same message bytes that were transmitted in the MESSAGE OUT phase in the same sequence. If the message consists of more than one byte, the INIT must make the ATN signal true before returning the ACK signal for the first byte and must keep it true until the last byte is transferred.

Unless a parity error is detected, the TARG can execute the received message immediately after its reception. If a parity error is detected, the TARG ignores that part of the message which has been received after the detection of the parity error. Suppose that when the INIT retransmits a series of messages in the MESSAGE OUT phase, the TARG has already executed some messages. In this event, the TARG must handle the received messages so that no logical contradiction will occur (for example, the TARG must ignore received messages that have already been executed).

If the TARG receives all message information normally without detecting a parity error, the TARG must enter an INFORMATION TRANSFER phase other than a MESSAGE OUT phase and must send at least one byte of information in order to advise the INIT that message transfer retry is unnecessary. However, for some types of message (ABORT and BUS DEVICE RESET, for example), the TARG can report the normal completion of message reception by entering a BUS FREE phase.

7.5.10 Signal requirements concerning transition between bus phases

When the SCSI bus is at a midpoint between two INFORMATION TRANSFER phases (during the period of bus phase transition), interface signals must satisfy the requirements below.

1) The status of the BSY, SEL, REQ, and ACK signals must not change.

2) The status of the ATN and RST signals can change within the range determined by the ATTENTION condition (see Subsection 7.6.1) or RESET condition (see Subsection 7.6.2).

3) The status of the C/D, I/O and MSG signals and the DATA BUS (DBn) can change. However, the direction of data transfer over the DATA BUS must satisfy the following rule. (See Figure 7.15.)

- When changing the direction of transfer from Out (from INIT to TARG) to In (from TARG to INIT), the TARG must begin to drive the data bus (DBn) at least 800 ns (Data Release Delay + Bus Settle Delay) after making the I/O signal true. The INIT must stop driving the data bus within 400 ns (Data Release Delay) after the I/O signal becomes true.

- When changing the direction of transfer from In (from TARG to INIT) to Out (from INIT to TARG), the TARG must stop driving the data bus (DBn) within 45 ns (Deskew Delay) after making the I/O signal false.

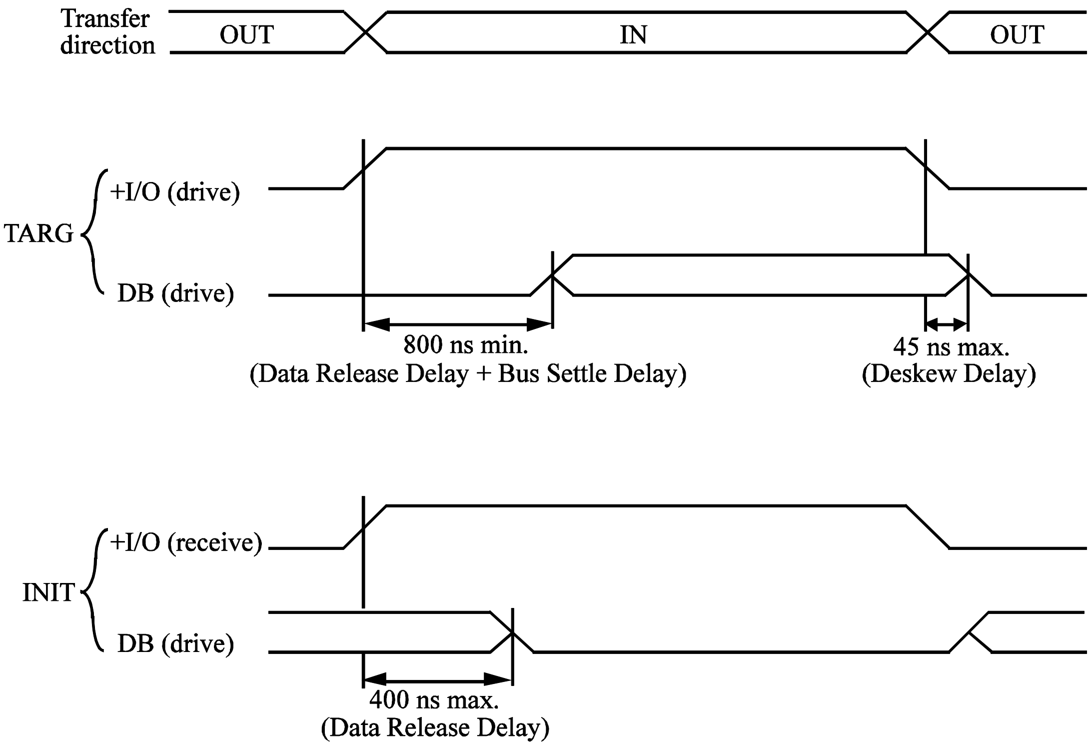

Figure 7.15 Switching direction of transfer over the data bus

7.5.11 Time monitoring feature

The ODD has a time monitoring feature for the SCSI bus to prevent hang-up of the SCSI bus in the case that the TARG cannot receive a response from the INIT in the RESELECTION or INFORMATION TRANSFER phase.

(1) Time monitoring in RESELECTION phase

The ODD monitors the time of the response (BSY signal) from the INIT in the RESELECTION phase. When the INIT does not send the BSY signal within a specified period, the ODD executes the timeout process (see Subsection 7.5.4) to free the SCSI bus and then executes the retry process (see Section 3.1) of the RESELECTION phase.

(2) Time monitoring in INFORMATION TRANSFER phase

The ODD monitors the timing of the ACK signal against the REQ signal in the INFORMATION TRANSFER phase. Time monitoring is executed during the following period:

- ECOMMAND, STATUS, or MESSAGE phase:

  Time taken from the moment of sending the REQ signal of the first byte to the moment of completing the reception of the ACK signal of the last byte of the phase.

- DATA phase:

  Time taken for completing eight REQ/ACK handshakes (average).

Note:

When the ACK signal is returned repeatedly within an interval of 500 ms or more, timeout may occur even if eight REQ/ACK handshakes on average had been terminated with the time listed in Table 7.9.

When timeout is detected, the ODD clears the command being executed and forces the SCSI bus into the BUS FREE phase (see Section 3.1).

Table 7.9 Setting value of SCSI time monitoring

Monitoring time in INFORMATION TRANSFER phase	Monitoring time in RESELECTION phase	Number of retries in RESELECTION phase
About 30 sec	About 250 ms	10 times

7.6 Bus Conditions

Two types of asynchronous operations, an ATTENTION condition and a RESET condition, are provided to control and modify the bus phase transition sequence (bus condition).

7.6.1 ATTENTION condition

The ATTENTION condition allows an INIT to report that the INIT has messages to be sent to the TARG. The TARG receives a message from the INIT by executing the MESSAGE OUT phase. Figure 7.16 shows the ATTENTION condition.

(1) Generation and release of ATTENTION condition (INIT)

By making the ATN signal true, the INIT can generate the ATTENTION condition any time except during the ARBITRATION or BUS FREE phase.

Consider the generation of a new ATTENTION condition in the INFORMATION TRANSFER phase. To inform the TARG of the ATTENTION condition before the transition to the next new bus phase, the INIT must set the ATN signal true before 90 ns (Deskew Delay × 2) or more from the timing of setting the ACK signal false for the last byte being transferred in the current bus phase. If the ATN sending timing is delayed, the TARG may not be informed of the ATTENTION condition until the next bus phase. The INIT may not operate as it should.

When transferring message information in several bytes in the MESSAGE OUT phase, the INIT must keep the ATN signal true. The INIT can make the ATN signal false any time except while the ACK signal is true in the MESSAGE OUT phase. When transferring the last byte in the MESSAGE OUT phase, the INIT generally makes the ATN signal false during the period between the time the REQ signal becomes true and the time it returns the ACK signal. In this case, the INIT must set the ATN signal false before 90 ns (Deskew Delay × 2) or more from the time of setting the ACK signal true.

The INIT must make the ATN signal false before making the ACK signal true to transfer the last message byte if so specified for the particular type of message to the TARG. (See Subsection 2.1.2.)

(2) Response against ATTENTION condition (TARG)

The TARG must enter the MESSAGE OUT phase and respond to the ATTENTION condition under the following situations. After terminating the MESSAGE OUT phase and sending back a MESSAGE REJECT message, the TARG must reenter the MESSAGE OUT phase if the ATN signal is true.

- When the ATN signal becomes true in the COMMAND phase, the TARG must initiate the MESSAGE OUT phase immediately after the command (command descriptor block [CDB]) has completed the transfer of all or some bytes.

- When the ATN signal becomes true in the DATA phase, the TARG must enter the MESSAGE OUT phase immediately after the DATA phase. The TARG can enter the MESSAGE OUT phase at any time. (For example, the data transfer need not be terminated at a logical data block boundary.) The INIT must continue REQ/ACK handshaking (DATA phase) until the bus phase changes.

- When the ATN signal becomes true in the STATUS phase, the TARG must enter the MESSAGE OUT phase after the status byte transfer is completed.

- When the ATN signal becomes true in the MESSAGE IN phase, the TARG must enter the MESSAGE OUT phase immediately after transferring the current message.

- When the ATN signal becomes true in the SELECTION phase, the selected TARG must enter the MESSAGE OUT phase immediately after the SELECTION phase.

- When the ATN signal becomes true in the RESELECTION phase, the TARG must enter the MESSAGE OUT phase after the IDENTIFY message transmission is completed.

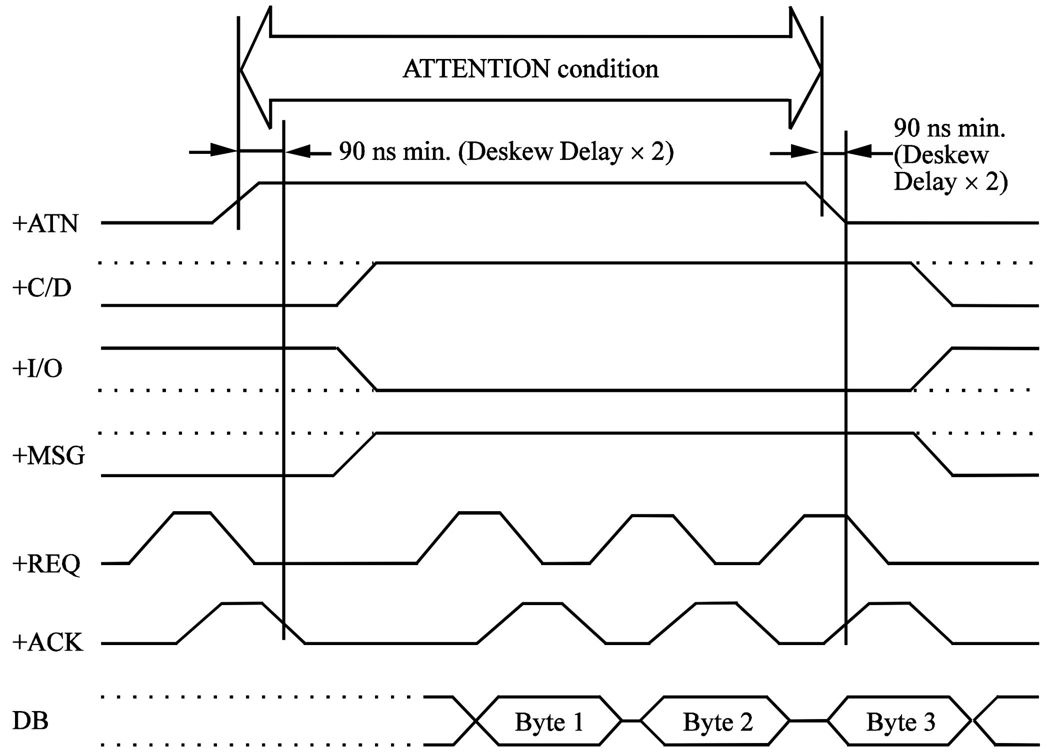

Note:

The time is specified at the SCSI connector terminal of the TARG.

Figure 7.16 ATTENTION condition

IMPORTANT

The ATTENTION condition generated by the INIT in the SELECTION phase determines the message level to be used in the command execution sequence. (Details are explained in Subsection 2.1.3.) If the ATTENTION condition is not generated in the SELECTION phase, the TARG uses a COMMAND COMPLETE message only. The TARG does not respond to the ATTENTION condition even if it was generated in the subsequent bus phase. Therefore, the TARG does not enter the MESSAGE OUT phase.

7.6.2 RESET condition

The RESET condition allows all SCSI devices to immediately release the bus. RESET has higher priority than any other phases and bus conditions. Any SCSI device can generate the RESET condition at any time by keeping the RST signal true for 25 µs (Reset Hold Time) or more. The state of all bus signals except RST signals are undefined during the RESET condition.

All SCSI devices must deactivate all the bus signals except RST signals and release the bus within 800 ns (Bus Clear Delay) after the RST signal becomes true. After the RESET condition, the SCSI bus must enter the BUS FREE phase. Figure 7.17 shows the RESET condition.

The following are the ODD operations when the RESET condition is detected.

1) All commands including those being executed and those in a stack are cleared.

2) The reserve status of the disk drive is reset.

3) The operation mode set by a message or the command is initialized as when power is turned on.

    - The current value in the parameter set by a MODE SELECT command is initialized to the saved value last established. If the value is not saved, it is initialized to the default value.

    - Parameters defined for synchronous transfer between the ODD and SCSI device is cleared. The mode defined for data transfer among all SCSI devices is initialized to asynchronous mode.

4) The UNIT ATTENTION condition is generated for all SCSI devices.

5) The sense data is no longer retained and is cleared.

6) All data read into the data buffer in advance by the read-ahead cache feature is invalidated.

IMPORTANT

1. *The ODD does not generate a RESET condition.*

2. *The ODD provides only the "hard" RESET condition specified by the SCSI standard.*

3. *Reset Hold Time (min. 25 µs) is specified to guarantee that any SCSI device can recognize the occurrence the RESET condition. On the ODD, even if the pulse width is less than 25 µs, the RESET condition is effective.*

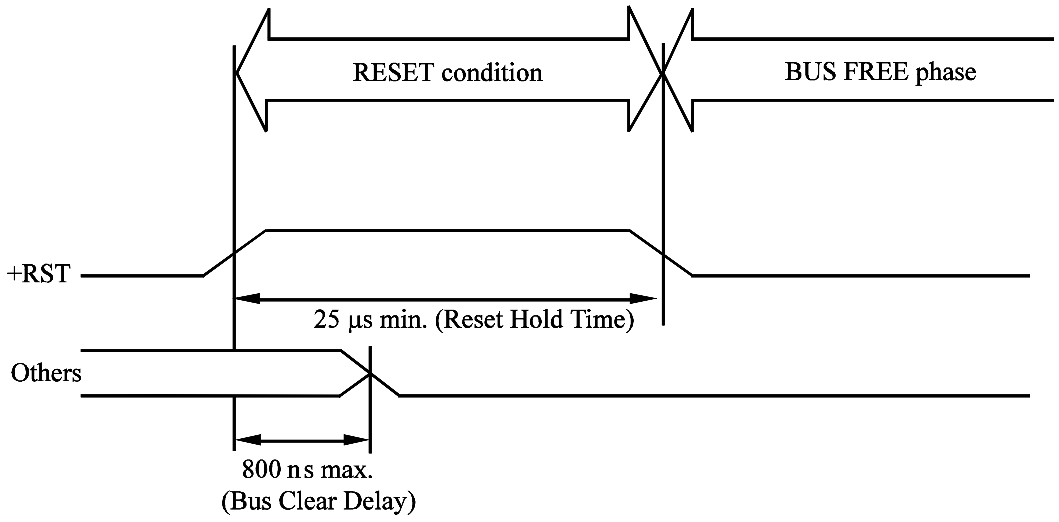

Figure 7.17 RESET condition

7.7 Bus Sequence

SCSI bus phases are switched in the specified sequence according to the command operation executed in the TARG. After a TARG has asserted the BSY signal in the SELECTION or RESELECTION phase, the bus phase sequence other than ATTENTION condition and RESET condition is controlled by the TARG.

All bus phases can be aborted through the RESET condition so that the BUS FREE phase is always created. Also, any other phase can be followed by the BUS FREE phase.

Note:

The TARG can enter the BUS FREE phase in order to report an error condition. For details, see Subsection 7.5.1.

Figure 7.18 shows the allowable bus phase sequence applied to systems without the ARBITRATION phase and sytems with the ARBITRATION phase. Figure 7.22 provides an example of bus phase sequence during single command execution.

IMPORTANT

Figure 7.21 shows the bus phase sequences applied to systems without the ARBITRATION phase, systems with the ARBITRATION phase, systems with the MESSAGE OUT phase, and systems without the MESSAGE OUT phase. The generation of the ATTENTION condition determines whether or not systems use the MESSAGE OUT phase. If the ATTENTION condition is not generated, the TARG assumes that the INIT is supporting only a COMMAND COMPLETE message and the TARG operates so that it will not use other messages in the subsequent command execution sequence. The ATN signal status is ignored; therefore, the TARG does not enter the MESSAGE OUT phase.

When ARBITRATION is used with MESSAGE OUT

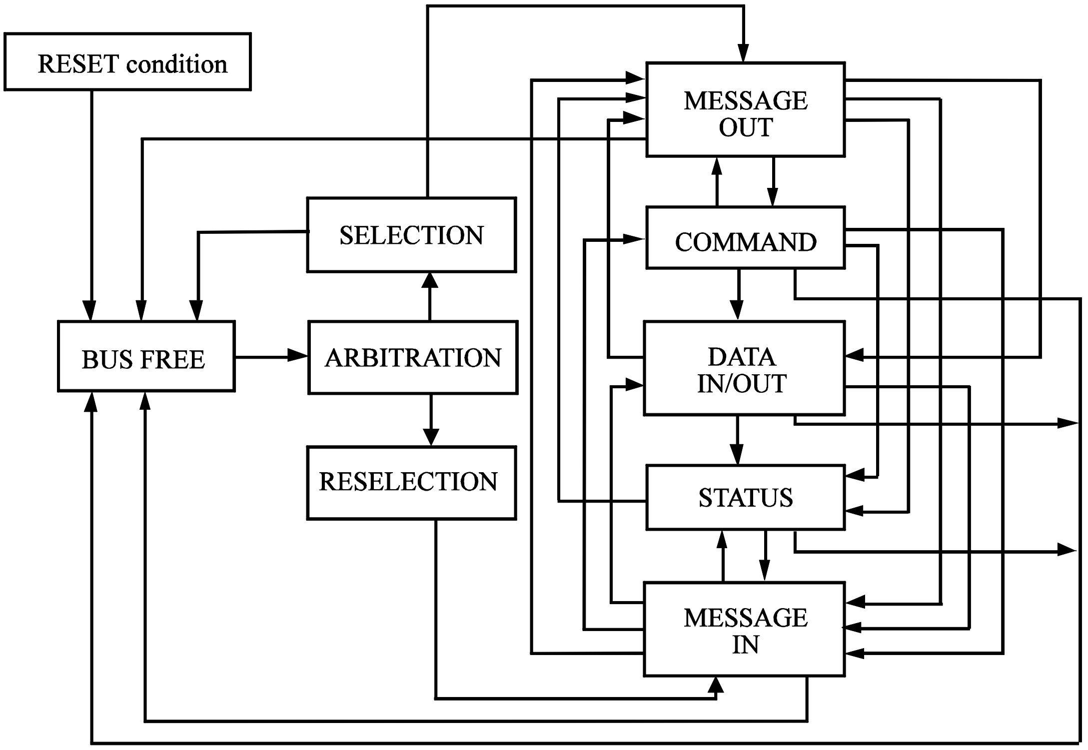

When ARBITRATION is used without MESSAGE OUT

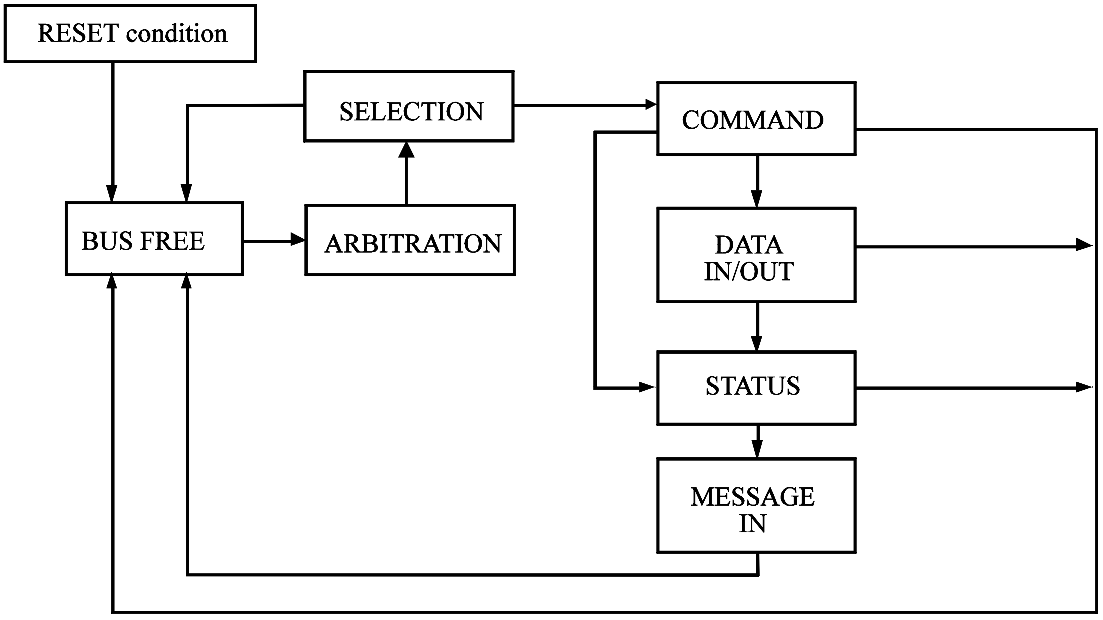

Figure 7.18 Bus phase sequence (1 of 2)

When ARBITRATION is not used with MESSAGE OUT

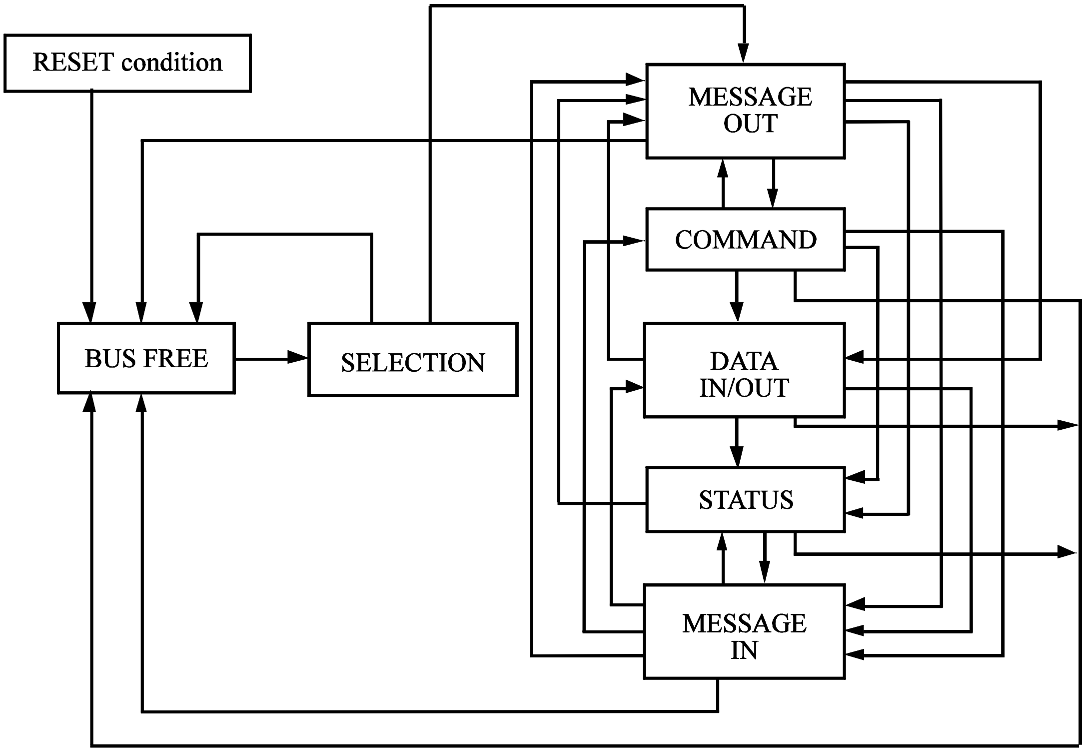

When ARBITRATION is not used without MESSAGE OUT

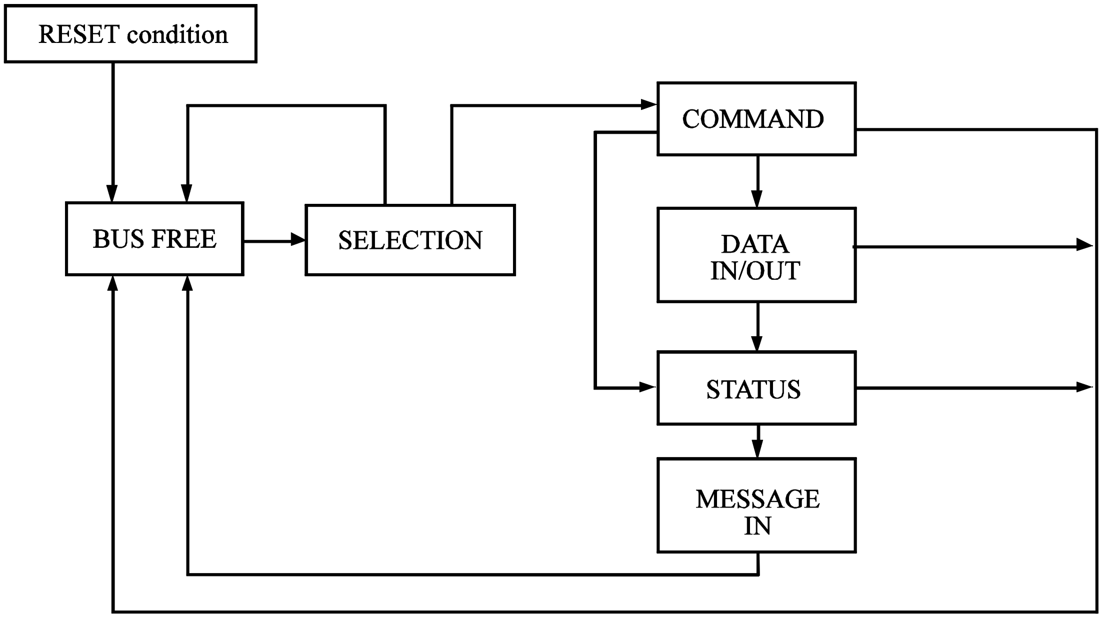

Figure 7.18 Bus phase sequence (2 of 2)

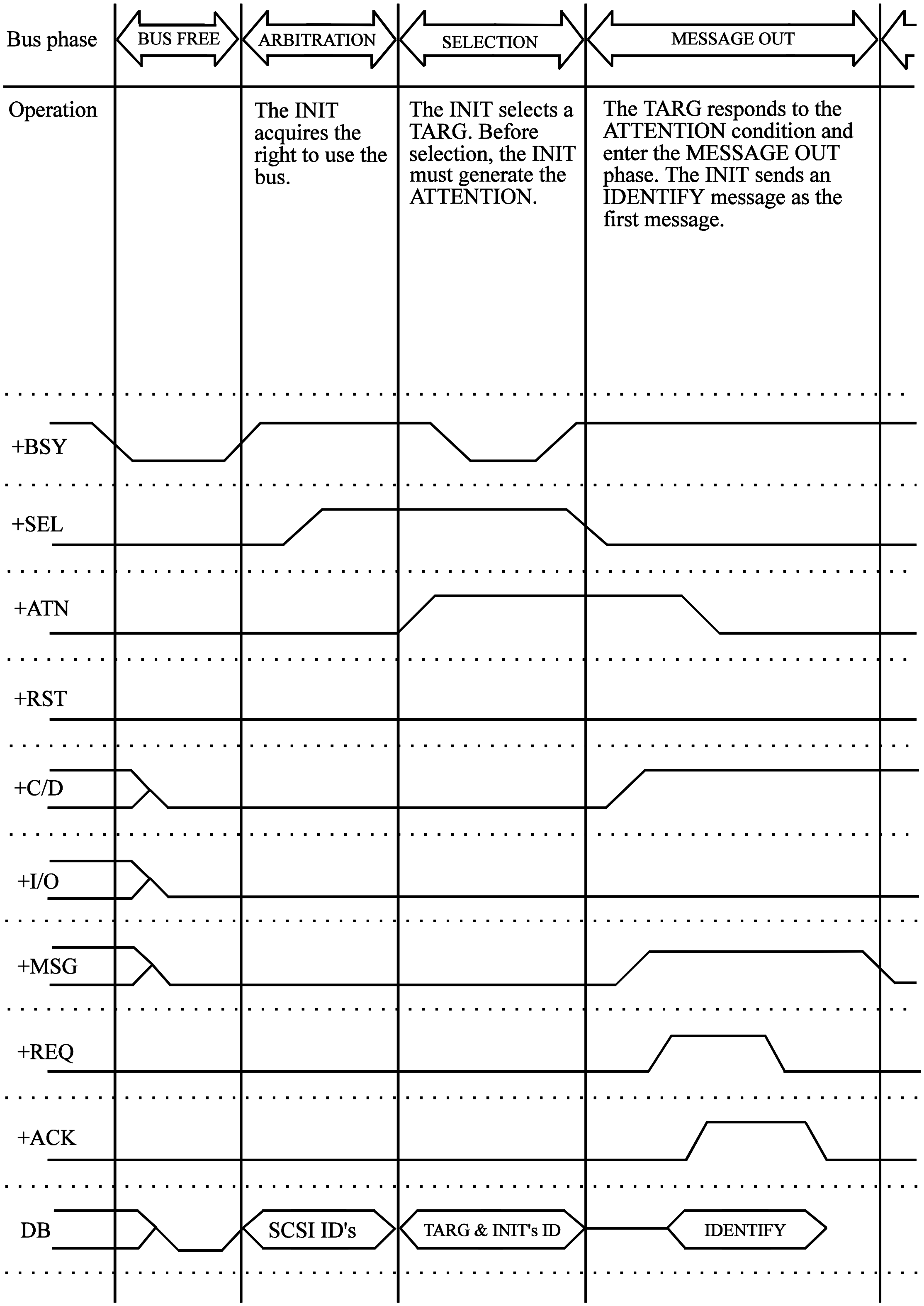

Figure 7.19 Example of bus phase transition on execution of a single command (1 of 5)

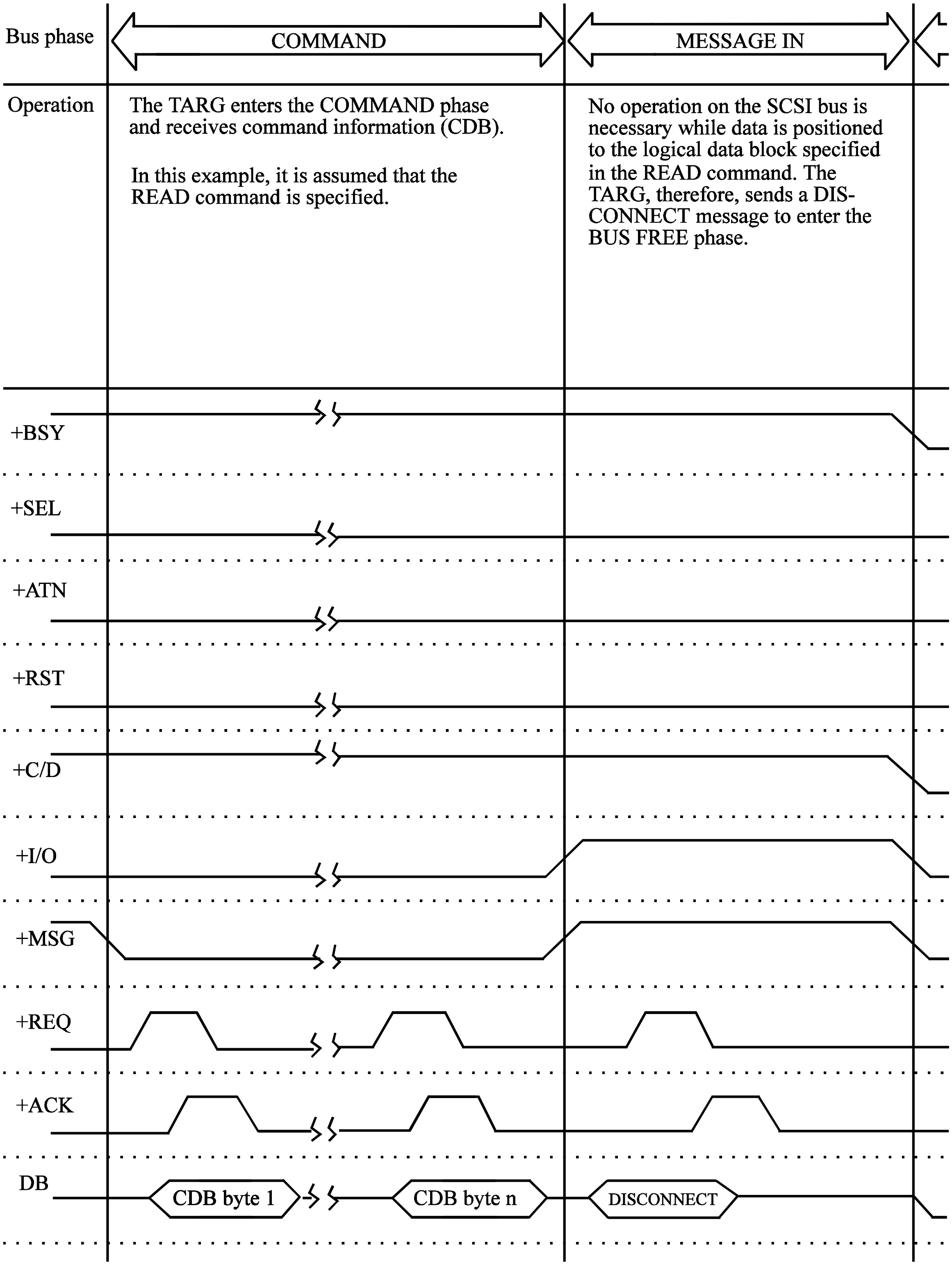

Figure 7.19 Example of bus phase transition on execution of a single command (2 of 5)

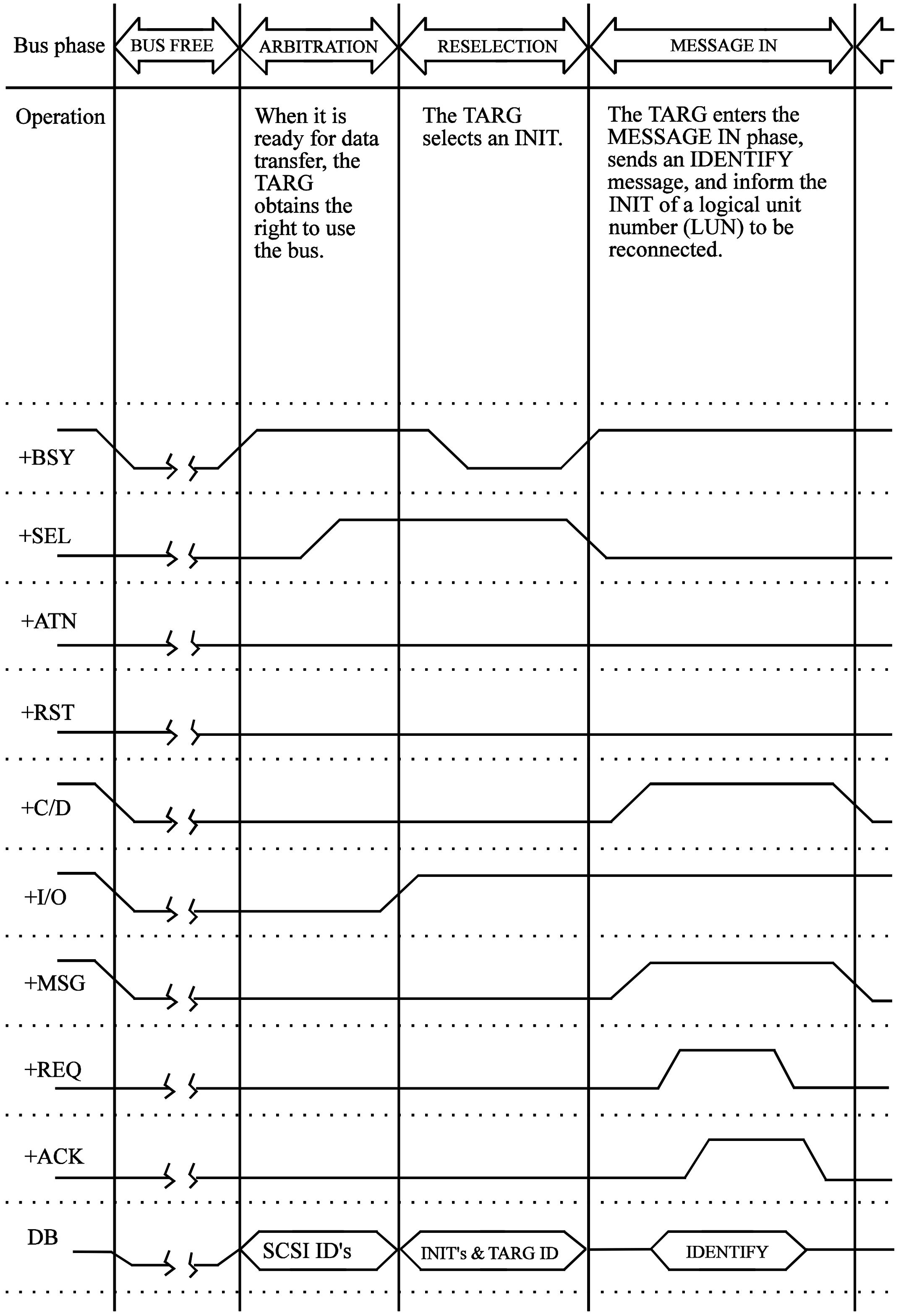

Figure 7.19 Example of bus phase transition on execution of a single command (3 of 5)

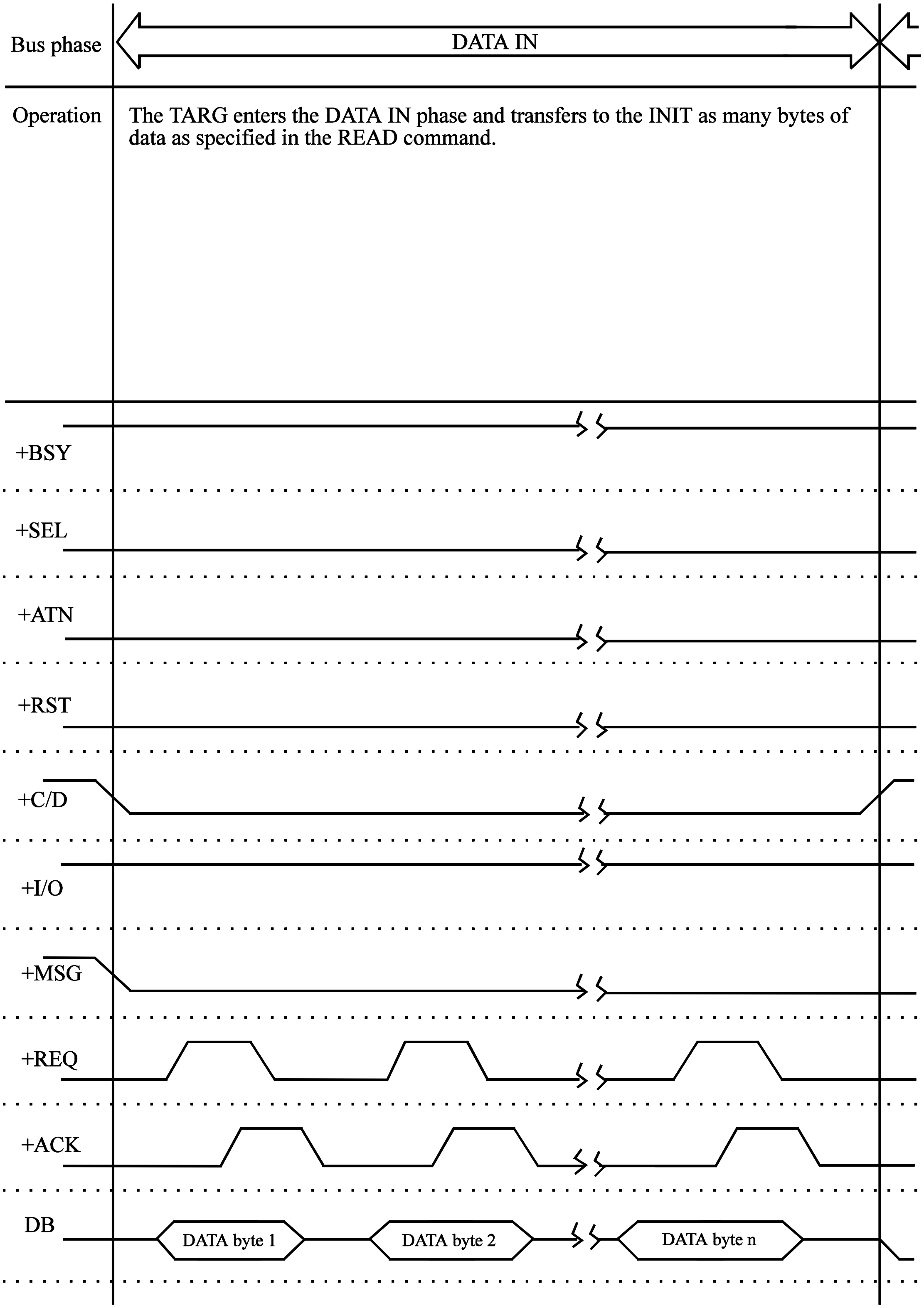

Figure 7.19 Example of bus phase transition on execution of a single command (4 of 5)

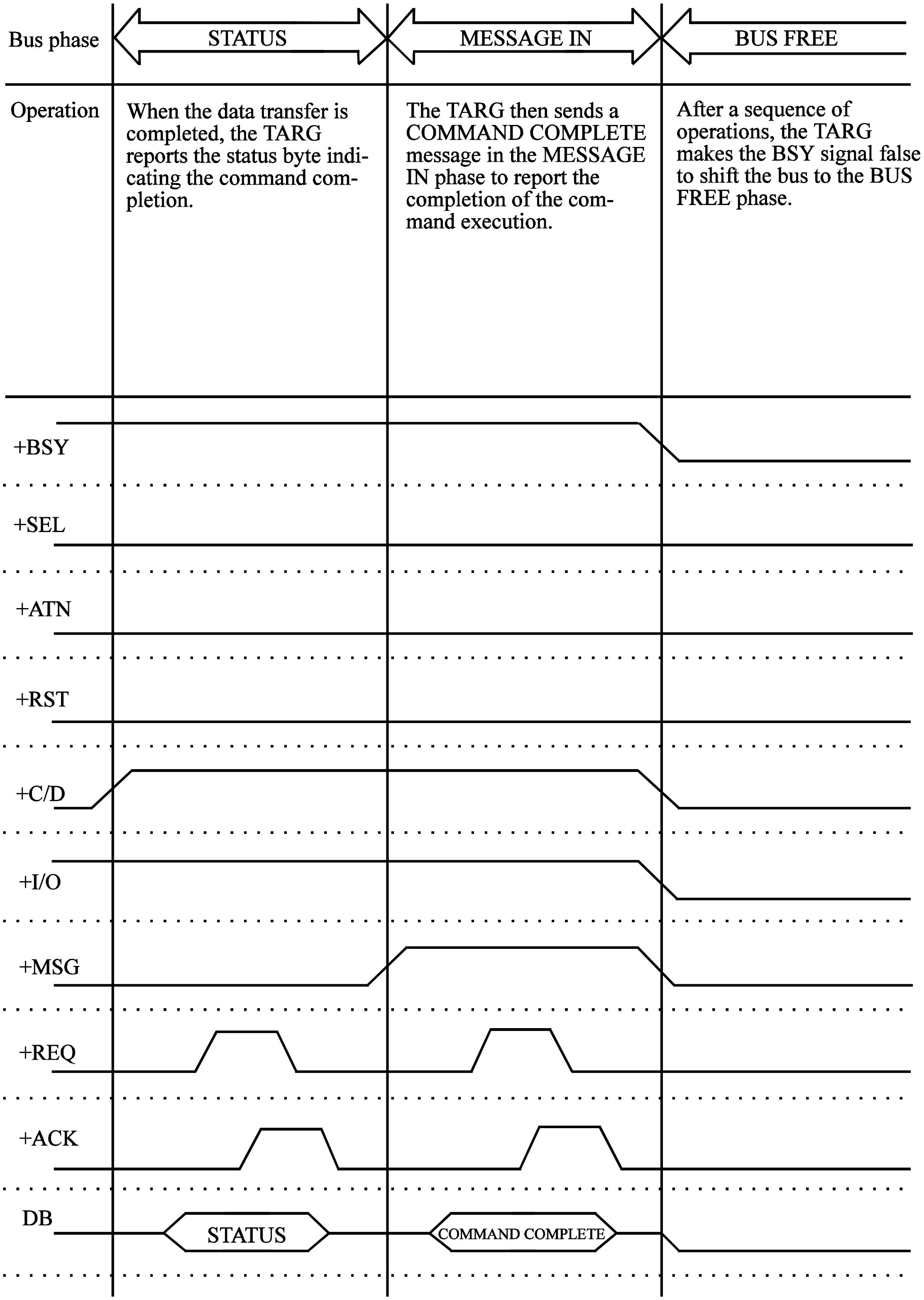

Figure 7.19 Example of bus phase transition on execution of a single command (5 of 5)

This page is intentionally left blank.

Glossary

Error detection and correction

A series of methods are used to append redundancy to data in a known format and to record data. The decoder removes the redundancy when the data is read. The redundancy information is used for error detection and correction.

Error correction code

Error detection code designed to correct certain types of error in data.

Initiator (INIT)

An SCSI device that activated an input-output operation on an SCSI bus. In this manual, an initiator may be abbreviated to INIT.

Interleave

A process to sort the physical sequence of data units so that the data can withstand burst errors better.

Recording layer

A layer in the disk where data is recorded during manufacture and during writing.

Recording power

The defined power of incidence for the incident surface used to form marks.

Clamped area

The ring section of the disk where clamp force is applied by the clamp mechanism.

Defect management

Defect management is done by an automatic real-time program. The program changes the read and write power, focus, and tracking when an error is detected. The program also determines whether to discard a sector that contains many errors. In batch mode, defect management is a guideline for disk rerecording and saving.

Disk case

A case that covers the optical disk. The case protects the disk from damage during handling and makes it possible to replace disks. The case has space for a label, write-protection notch, automatic handling preparation, and medium identification hole.

Command

An input-output instruction for the target described in the CDB.

Control track

Track used for medium parameters and format information required for writing and reading the optical disk.

LUN (Logical Unit Number)

A device address used to identify a logical unit.

Acceleration in the axis direction

Acceleration to the defined rotation speed in the recording layer along a straight line perpendicular to the disk reference surface. Detected optically.

Displacement of axis direction

Displacement of a point from the standard position in the recording layer perpendicular to the disk reference surface. The standard position is detected optically by measuring the protective layer thickness and refractive index based on the disk reference surface.

Status

One-byte information that indicates the command termination state. Reported by the target to the initiator when execution of a command ends.

Spindle

The disk drive section that contacts the disk and hub.

Sense key

A 4-bit code set in sense data. This information is used to classify the type of error detected.

Sense code

One-byte code In sense data. This information specifies the type of error detected.

Sense data

Information created by the target to post the details of error information at the command termination state.

Target (TARG)

An SCSI device activated by the initiator (INIT). The target executes an input-output operation. In this manual, target is sometimes abbreviated as TARG.

Disk reference surface

Defined as an ideally flat ring surface of an ideal spindle that contacts the disk clamped area. Perpendicular to the axis of rotation.

Disconnect

Processing performed by the target during the command execution processes. The target temporarily releases the connect state between an SCSI bus and an initiator when no further operation on an SCSI bus is required.

Bus condition

An asynchronous condition for changing the transition of SCSI bus state. The two bus conditions are attention and reset.

Bus phase

SCSI bus state. An SCSI bus has the following states:

- Bus free phase
- Arbitration phase
- Selection phase
- Reselection phase
- Information transfer phase

The information transfer phase is further classified into the following phases according to the type of information to be transferred.

- Data in phase
- Data out phase
- Command phase
- Status phase
- Message in phase
- Message out phase

Message

Control information for a series of bus phases and execution sequence of input-output operations. Messages are transmitted between the initiator and the target active on an SCSI bus.

Reconnect

Processing performed by the target that executed the disconnect processing. The target reconnects the initiator when operation on an SCSI bus is necessary.

Logical unit

The unit of devices subject to input-output operation on an SCSI bus.

Common command set (CCS)

The standard SCSI logical specifications stipulated by the ANSI working committee. The CCS defines the standard functions of direct access devices (like magnetic disks).

Command descriptor block (CDB)

A series of data that describes the input-output operation commands. The CDB is sent from the initiator to the target.

Logical unit number (LUN)

A device address used to identify a logical unit.

Small computer system interface (SCSI)

Input-output interface standardized by ANSI. [Rating code: ANSI X3.131-1986]

SCSI ID

A physical device address used to identify an SCSI device on an SCSI bus. An SCSI ID is unique to each SCSI device. ID #0 to ID #7 that corresponds to the bit number of the SCSI data bus can be allocated.

SCSI device

A general name for devices (like input-output units, input-output controllers, and host adapters) connected to an SCSI bus.

This page is intentionally left blank.

Abbreviations

A

AC	Alternating Current
ACK	ACKnowledge
ALPG	Automatic Laser Power Control
AM	Address Mark
ANSI	American National Standards Institute
ARRE	Automatic Read Reallocation Enabled
ASC	Additional Sense Code
ASCII	American Standard Code for Information Interchange
ASCQ	Additional Sense Code Qualifier
ATN	ATteNtion
AWG	American Wire Gauge
AWRE	Automatic Write Reallocation Enabled

B

BCV	Buffer Control Valid
BPV	Bit Pointer Varid
BSY	BuSY
BytChk	Byte Check

C

C/D	Control/Data
CCS	Common Command Set
CDB	Command Descriptor Block
CRC	Cyclic Redundancy Code
CSA	Canadian Standards Association

D

DB	Data Bus
DBD	Disable Block Descripter
DBP	Data Bus Parity
DC	Direct Current
DCRT	Disable CeRTification
DDS	Disk Definition Sector
DMA	Defect Management Area
DPO	Disable Page Out
DPRY	Disable PRimarY
DSP	Digital Signal Processor

E

EBC	Enable Blank Check
EBP	Erase By-Pass
ECC	Error Correction Code
EN	European Norm
EVPD	Enable Vital Product Data

F

FG	Frame Ground
FIFO	First In First Out
FOV	Format Options Valid
FRU	Field Replaceable Unit

I

I/O	Input/Output
IC	Integrated Circuit
ID	IDentifier
IDD	Intelligent Disk Drive
IEC	International Electrotechnical Commission
Immed	Immediate
INIT	INITiator
IP	Initialize Pattern
ISO	International Standardization Organization

L

LD	Laser Diode
LED	Light Emitting Diode
LoEj	Load Eject
LSB	Least Significant Byte
LUN	Logical Unit Number

M

MPU	MicroProcessor Unit
MSB	Most Significant Byte
MSG	MeSeaGe
MTBF	Mean Time Between Failures
MTTR	Mean Time To Repair

N

N.C.	No Connection

O

ODD	Optional Disk Drive

ODF	Offset Detection Flag
OEM	Original Equipment Manufacturer

P

PA	PostAmble
P/N	Part Number
PC	Page Control
PCA	Printed Circuit Assembly
PCF	Page Control Field
PCR	Parameter Code Reset
PDL	Primary Defect List
PEP	Phase Encoded Part
PF	Page Format
PLL	Phase-Locked Loop
PMI	Partial Medium Indicator
PPC	Parameter Pointer Control
PWM	Pulse Width Modulation

R

RAM	Random-Access Memory
RelAdr	Relative Addressing
REQ	REQuest
RH	Relative Humidity
ROM	Read only Memory
rpm	revolutions per minute
RST	ReSeT
RSV	ReSerVed

S

S/N	Serial Number
SB	Spare Band
SCSI	Small Computer System Interface
SCT	SeCTor
SDL	Secondary Defect List
SDTR	Synchronous Data Transfer Request
SEL	SELect
SDTR	Synchronous Data Transfer Request
SEL	SELect
SFP	Standard Formatted Part
SKSV	Sense Key Specific Valid
SM	Sector Mark
SNSKEY	SeNSe KEY
SP	Save Page
SP	Save Parameter
STPF	SToP Format
SYNC	SYNCronization mark

T

TARG	TARGet
TERMPWR	TERMinator PoWeR
TRM	TeRMinator
Typ	Typical

U

UB	User Band
UL	Underwriters Laboratories Incorporated

V

VDE	Verband Deutscher Elektrotechniker
VFO	Variable Frequency Oscillator
VLD	VaLiD
VPD	Vital Product Data
VU	Vendor Unique

Index

1-inch height 1 - 2
128 MB disk 2 - 18
230 MB disk 2 - 18
5 millions 1 - 3
540 MB/640 MB disk 2 - 18

A

AC noise filter 3 - 13
ACK (ACKNOWLEDGE) 7 - 5
Actuator 1 - 7
Adaptability 1 - 4
Addressing 1 - 11
Air flow 3 - 3
Air purity 3-4
Algorithms for alternate processing 2 - 20
ARBITRATION phase 7 - 14, 7 - 16
ATN (ATTENTION) 7 - 5
ATTENTION condition 7 - 5, 7 - 37
Archival life 2 - 19
AS/NZS3548 class B 1 - 4
Australian wave standards 1 - 4
Automatic allocation of alternate data blocks 1 - 3
Automatic spindle stop function 1 - 3
Asynchronous mode 7 - 24
Asynchronous transfer 7 - 23

B

Bidirectional data bus 7 - 4
Bit error rate 2 - 6
BSY (BUSY) 7 - 5
BUS FREE phase 7 - 13, 7 - 14
Bus condition 7 - 37
Bus phase sequence 7 - 43
Bus sequence 7 - 42

C

C/D (CONTROL/DATA) 7 - 5
Cable connection mode 3 - 17
Cable connection requirements 3 - 17
Cable Connections 4 - 13
Canada, safety 1 - 4
Cartridge case 2 - 17
CDRH class 1 1 - 4
Centers of gravity 3 - 8
Changing the revision number 6 - 4
Checks before mounting the drive 4 - 12
Checks if errors occur at initial self-diagnosis 4 - 14
Class 5 millions 1 - 3
Cleaning 5 - 1
Cleaning Optical Disk Cartridge 5 - 9
Cleaning cloth 5 - 10
Cleaning Drive 5 - 6
Cleaning kit 5 - 9
Cleaning procedure 5 - 10
Cleaning solution 5 - 10
Cleaning tool 5 - 9
CNH1 4 - 12
CNH2 3 - 25
Collimator lens 1 - 8
COMMAND phase 7 - 21, 7 - 30
Configuration 1 - 7
Confirming initial operations 4 - 14
Connecting one optical disk drive 4 - 4
Connecting more than one optical disk drive 4 - 5
Connection Modes 4 - 4
Connection Requirement 3 - 14
Connector 3 - 14
Connector location 3 - 14
Connectors 3 - 14
Continuous block processing 1 - 4
Control circuit section 1 - 7, 1 - 8
Control circuit section block diagram 1 - 8
Controls the focus-tracking 1 - 9
CSA C22.2 No. 950 1 - 4
Current 3 - 11
Current waveform 3 - 11

D

Daisy chain 3 - 22
DATA BUS 7 - 4
DATA phase 7 - 21, 7 - 30
DATA IN phase 7 - 30
DATA OUT phase 7 - 30
Data security 2 - 7
Data transfer rate 7 - 30, 7 - 33
DC brushless spindle motor 1 - 7
DC ground 3 - 22
DC ground cable 4 - 13
Defect Management 2 - 20
Device type mode 3 - 25
Device type mode setting 3 - 25
Diagnosis 6 - 1
Diagnostic function 1 - 3, 6 - 1

Diagnostic command 6 - 2
Dimensions 3 - 5
Direct-overwrite medium 1 - 2
Disk 2 - 17
Disk specifications 2 - 18
Dismounting Drive 4 - 17
Drive circuit section 1 - 9
Drive Configuration 1 - 6
Drive control 1 - 9
Drive control circuit section 1 - 7
Drive model 1 - 6
Driver 7 - 6
Drive specifications 2 - 2
DSP (digital signal processor) 1 - 9
Dust particles 1 - 4
Dust resistance 1 - 3

E

ECC 1 - 3
Eject 1 - 7
Ejecting (removing) cartridge 5 - 4
Electrical requirements 7 - 6
EN55022 class B, EN50082-1 1 - 4
EN60825 1 - 4
EN60950 1 - 4
Environmental requirements 2 - 5, 3 - 1
Error rate 2 - 4, 2 - 6
Error recovery 1 - 3
Error-free 1 - 3
Europe, laser 1 - 4
Europe, safety 1 - 4
European wave standards 1 - 4
Execution of a single command 7 - 45
Example of alternate processing 2 - 21
Example of bus phase transition 7 - 45
Example of SCSI configuration 7 - 2
External dimensions 3 - 5
External light source 3 - 10
External magnetic fields 3 - 10
External operator panel 3 - 22
External operator panel cable 4 - 13
External operator panel circuit example 3 - 23
External operator panel interface connector 3 - 24
External operator panel setting 3 - 25

F

False 7 - 8
FAST SCSI Timing specifications 7 - 12
Features 1 - 1
Fixed optics section 1 - 7
Form factor 1 - 2

G

General notes 4 - 1
Generation of attention condition 7 - 37

H

Head actuator 1 - 8, 1 - 9
Head cleaner 5 - 6
High-speed data transfer 1 - 2
High-speed mean seek time 1 - 2
Hub 2 - 17

I

I/O (INPUT/OUTPUT) 7 - 5, 7 - 21
If processing terminates abnormally 4 - 17
INFORMATION TRANSFER phase 7 - 13, 7 - 21, 7 - 22
INFORMATION TRANSFER phase
INFORMATION TRANSFER phase identification 7 - 6
INIT 7 - 1
Initial self-diagnosis 6 - 2
Initiator 1 - 10, 7 - 1
Input-output device 1 - 11
Input voltage 3 - 11
Inserting cartridge 5 - 2
Installation 4 - 2
Installation direction 3 - 7
Installation Requirements 3 - 1
Interface 1 - 4, 3 - 24
Interface signal 7 - 3
Interface (SCSI bus) test 6 - 2
Interlock type 7 - 23
ISO standard 1 - 2

L

Laser beam 1 - 8
Laser diode 1 - 8
Lavel 2 - 17
LD controller 1 - 7
Leak magnetic field 3 - 10
Linear replacement algorithm 2 - 20
Linear voice coil motor 1 - 2, 1 - 8
Load 1 - 7
Loading time 2 - 4
Logical specification type 0 3 - 27
Logical units 1 - 12
Logical unit number 1 - 11, 7 - 1
Low noise 1 - 4
Low vibration 1 - 4
Lower power consumption 1 - 3
LUN 1 - 11, 7 - 1

M

Macintosh mode 3 - 26
Maintainability 1 - 3
Maintenance 6 - 1
Maintenance Information 6 - 3
Maintenance requirements 6 - 3
Mass storage data buffer 1 - 5
Maximum SCSI data transfer rate 2 - 4
Mean time between failure 1 - 3
Mechanical sections 1 - 7
Medium compatibility 1 - 2
MESSAGE phase 7 - 21, 7 - 33
MESSAGE IN phase 7 - 33
MESSAGE OUT phase 7 - 33
Microprocessor 1 - 9
Model 2 - 1
Model names 2 - 1
Mounting 4 - 12
Mounting frame structure 3 - 9
Mounting procedure 4 - 13
Mounting Requirements 3 - 5
Movable optics section 1 - 8
MPU 1 - 9
MSG (MESSAGE) 7 - 5
MTBF 1 - 3, 2 - 7

N

Noise filter 3 - 13
Note(s) 5 - 2, 5 - 9
Notes on Drive Handling 4 - 1
Notes on mounting 3 - 9
Notes on usage and storage 5 - 10

O

ODD 7 - 1
Offset-interlock 7 - 25
One-to-one connection 3 - 22
Open-collector 7 - 6
Operability 1 - 3
Operating Optical Disk Drive 5 - 1
Operation 5 - 1
Operation Confirmation after Installation 4 - 14
Optical disk cartridge 2 - 16, 5 - 7
Optical disk drive (ODD) 5 - 1
Optical components 1 - 7
Optical detector 1 - 8
Optical disk cartridge 2 - 16
Optical Disk Cartridge Operation 5 - 7
Optical Disk Cartridge Specifications 2 - 15
Optical disk drive configuration 1 - 7
Optical disk drive front view 5 - 1
Optical Disk Drive Specifications 2 - 1
Order number 2 - 1
OR-tied type 7 - 8

P

Packaging 4 - 2, 4 - 3
Panel 1 - 8
Parity check feature 7 - 4
Partial ROM 1 - 2
Performance 1 - 1, 1 - 2
Period of bus phase transition 7 - 34
Position detector 1 - 7
Positioning error rate 2 - 6
Positions of setting switches 4 - 6
Positions of setting terminals 4 - 6
Power is turned on 4 - 14
Power on/off sequence 3 - 11
Power requirements 2 - 5
Power save 1 - 3
Power save mode 2 - 4
Power supply 3 - 12
Power supply cable 3 - 22, 4 - 13
Power supply connector 3 - 15
Power supply for terminating registor 7 - 7
Pre-reading 1 - 5
Preparation for Use 4 - 14
Pulse-width modulation 1 - 8
PWM 1 - 8

R

Random read test 6 - 2
Read test 6 - 3
Read-ahead cache feature 1 - 5
Receiver 7 - 6
Recommended components for connection 3 - 18
Recommended optical disk cartridge 2 - 15
Reed-Solomon error correction 1 - 3
Registor termination 7 - 7
Release functions 1 - 5
Reliability 1 - 3, 2 - 7
Repair 6 - 3
RESELECTION phase 7 - 19, 7 - 20
Reserve function 1 - 5
Reset condition 7 - 40, 7-42
Response against ATTENTION condition (TARG) 7 - 38
Response sequence 7 - 17, 7 - 20
REQ (REQUEST) 7 - 5
Requirements for terminating registor power supply 7 - 7
Revision label 6 - 4
Revision number 6 - 4
Revision number indication 6 - 4
RST (RESET) 7 - 5

Rubber vibration isolators 1 - 4

S

Safety standards 1 - 4
SCAM mode 3 - 25
SCAM mode setting 3 - 25
SCSI-2 1 - 4
SCSI bus 6 - 2
SCSI bus configuration 1 - 10
SCSI bus connection modes 4 - 4
SCSI cable 3 - 18, 4 - 13
SCSI cable connection 3 - 21
SCSI cable connector 3 - 19
SCSI connection check 4 - 15, 4 - 16
SCSI connector 3 - 15
SCSI controller section 1 - 7, 1 - 9
SCSI data bus parity checking 4 - 8
SCSI Function Specification 2 - 8
SCSI ID 1 - 11, 4 - 8, 7 - 1, 7 - 4
SCSI interface connector 3 - 15
SCSI termination circuit 7 - 7
SCSI terminating registor 3 - 12
SCSI terminating registor mode 4 - 10
Sector slipping algorithm 2 - 20
Seek time 2 - 2, 2 - 3
Seeks 1 - 7
SEL (SELECT) 7 - 5
SELECTION phase 7 - 17, 7 - 18
Separate optical sections 1 - 8
Sequential read test 6 - 2
Service clearance 3 - 10
Service system 6 - 3
Setting case 5 - 10
Setting case cover 5 - 12
Setting checklist 4 - 12
Setting of supplying power to SCSI terminating resistor 4 - 10
Setting switches 4 - 7
Setting the cartridge 5 - 12
Settings 4 - 5
Setting value of SCSI time monitoring 7 - 36
Shelf life 2 - 19
Shock resistance 1 - 4
Shutter 2 - 16, 2 - 17
Signal assignment of SCSI connector 3 - 16
Signal driving conditions 7 - 8
Signal driving method 7 - 8
Signal requirements 7 - 34
Signal sources 7 - 9
Signal status value 7 - 8
Slipping 1 - 5
Specifications 2 - 1
Spindle motor 1 - 7
Star-chain-connected 3 - 22
Start sequence 7 - 17
STATUS phase 7 - 21, 7 - 33
Storage 4 - 3
Surface temperature measurement points 3 - 2
Synchronous mode 7 - 25, 7 - 28
System Configuration 1 - 10, 7 - 1
System ground 3 - 10

T

TARG 7 - 1
Target 1 - 10, 7 - 1
Temperature measurement point 3 - 1
Temperature requirements 3 - 3
Temperature rise 3 - 4
Terminal 3 - 14
Terminal locations 3 - 14
Terminals 3 - 14
Terminating resistor mode 4 - 10
Termination circuit 7 - 7
TERMPWR signal 7 - 7
Test 6 - 2
Test program 6 - 2
Time monitoring feature 7 - 36
Time monitoring in INFORMATION TRANSFER phase 7 - 36
Time monitoring in RESELECTION phase 7 - 36
Time monitoring of response wait 7 - 27
Timeout procedure 7 - 19
Timing rule 7 - 10
Timing specifications 7 - 10
Transfer from INIT 7 - 23, 7 - 30
Transfer from TARG 7 - 23, 7 - 28
Transfer in FAST SCSI mode 7 - 29
Transportation 4 - 3
Transporting 5 - 9
Tri-state buffer circuit 7 - 6, 7 - 12

U

U.S.A., laser 1 - 4
U.S.A., safety 1 - 4
UL1950 1 - 4
Unique adderss 7 - 1
Unique device address 1 - 11
Unloading time 2 - 4
Unpackaging 4 - 2
Using 5 - 9

V

Various radio wave standards 1 - 4
Verify mode 3 - 26
Vibration 1 - 4
Vibration resistance 1 - 4

W

When the drive power is off: 5 - 3

Wide operating environment 1 - 4
Write 6 - 3

When using the cartridge: 5 - 9

Write cache feature 1 - 5
Write cache mode 4 - 9
Write cache mode setting 4 - 9
Write protect 5 - 8
Write protect tab 2 - 17
Write test 6 - 3

Comments concerning this manual can be directed to one of the following addresses:

FUJITSU LIMITED
Business Planning
Solid Square East Tower
580 Horikawa-cho,Saiwai-ku, Kawasaki,
210-0913, Japan
TEL: 81-44-540-4056
FAX: 81-44-540-4123

FUJITSU COMPUTER PRODUCTS OF AMERICA, INC.
2904 Orchard Parkway, San Jose,
California 95134-2009, U.S.A.
TEL: 1-408-432-6333
FAX: 1-408-432-3908

FUJITSU CANADA INC.
2800 Matheson Blvd. East, Mississauga, Toronto,
Ontario L4W 4X5, CANADA
TEL: 1-905-602-5454
FAX: 1-905-602-5457

FUJITSU EUROPE LIMITED
2, Longwalk Road, Stockley Park, Uxbridge,
Middlesex UB11 1AB, ENGLAND
TEL: 44-81-573-4444
FAX: 44-81-573-2643

FUJITSU DEUTSCHLAND GmbH
Frankfurter Ring 211, 80807 München, GERMANY
TEL: 49-89-323780
FAX: 49-89-32378100

FUJITSU NORDIC AB
Kung Hans Väg 12, S-192 68 Sollentura, SWEDEN
TEL: 46-8-626-4500
FAX: 46-8-626-4588

FUJITSU ITALIA S.p.A.
Via Nazario Sauro, 38 20099 Sesto S. Giovanni (MI), ITALY
TEL: 39-2-26294-1
FAX: 39-2-26294-201

FUJITSU FRANCE S.A.
I, Place des Etas-Unis, SILIC 310,
94588 Rungis Cedex, FRANCE
TEL: 33-1-41-80-38-80
FAX: 33-1-41-80-38-66

FUJITSU ICL ESPAÑA S.A.
Almagro 40, 28010 Madrid, SPAIN
TEL: 34-91-681-8100
FAX: 34-91-681-8125

FUJITSU AUSTRALIA LIMITED
2 Julius Avenue (Cnr Delhi Road) North Ryde N.S.W. 2113,
AUSTRALIA
TEL: 61-2-9776-4555
FAX: 61-2-9776-4556

FUJITSU HONG KONG LTD.
Room 2521, Sun Hung Kai Centre, 30 Harbour Road, HONG HONG
TEL: 852-2827-5780
FAX: 852-2827-4724

FUJITSU KOREA LTD.
Coryo Finance Center Bldg, 23-6, YoulDo-Dong,
Young DungPo-Gu, Seoul, Republic of KOREA
TEL: 82-2-3787-6000
FAX: 82-2-3787-6070

FUJITSU COMPUTERS (SINGAPORE) PTE. LTD
20 Science Park Road #03-01,
TELETECH PARK SINGAPORE SCIENCE PARK II,
Singapore 117674
TEL: 65-777-6577
FAX: 65-771-5499

FUJITSU TAIWAN LTD.
8F, Hun Tai Center, 168-170, Tun Hwa North Road,
1st Sec., Taipei, TAIWAN
TEL: 886-2-545-7700
FAX: 886-2-717-4644

FUJITSU SYSTEMS BUSINESS (MALAYSIA) SDN. BHD.
Fujitsu Plaza, 1A, Jalan Tandang 204, P.O. Box 636 Pejabat Pos
Jalan Sultan
46770 Petaling Jaya, Selangor Darul Ehsan, Malaysia
TEL: 60-3-793-3888
FAX: 60-3-793-0888

FUJITSU SYSTEMS BUSINESS (THAILAND) LTD.
12th F1., Olympia Thai Tower, 444 Rachadapisek Road,
Samsennok, Huay Kwang, Bangkok 10320, Thailand
TEL: 66-2-512-6066
FAX: 66-2-512-6068

FUJITSU LIMITED

Reader Comment Form

We would appreciate your comments and suggestions for improving this publication.			
Publication No.	Rev. Letter	Title	Current Date

How did you use this publication?	Is the material presented effectively?
☐ Learning ☐ Installing ☐ Sales ☐ Reference ☐ Maintaining ☐ Operating	☐ Fully covered ☐ Well Illustrated ☐ Well Organized ☐ Clean
What is your overall rating of this publication?	What is your occupation?
☐ Very Good ☐ Fair ☐ Very Poor ☐ Good ☐ Poor	

Your other comments may be entered here. Please be specific and give page, paragraph and line number references where applicable.

Your Name & Return Address

Thank you for your interest. Please send this sheet to one of the addresses in a left page.

FUJITSU